CNHOWDER®


## 温州奥锐卡电子科技有限公司

**WENZHOU HOWDER ELECTRONIC TECHNOLOGY CO.,LTD**

No.51-53 Zhongwei Road Xinguang Industrial Zone
Liushi Wenzhou Zhejiang China.
TEL: 86-577-62718728
FAX: 86-577-62718729

E-mail: sales@cnhowder.com
info@cnhowder.com
Http: //www.cnhowder.com


Catalog

Http

# TERMINALS

## &CONNECTORS / 奥銳卡冷壓接綫端子 / 連接器

www.cnhowder.com

WE WILL BE BEST

我们会更好！

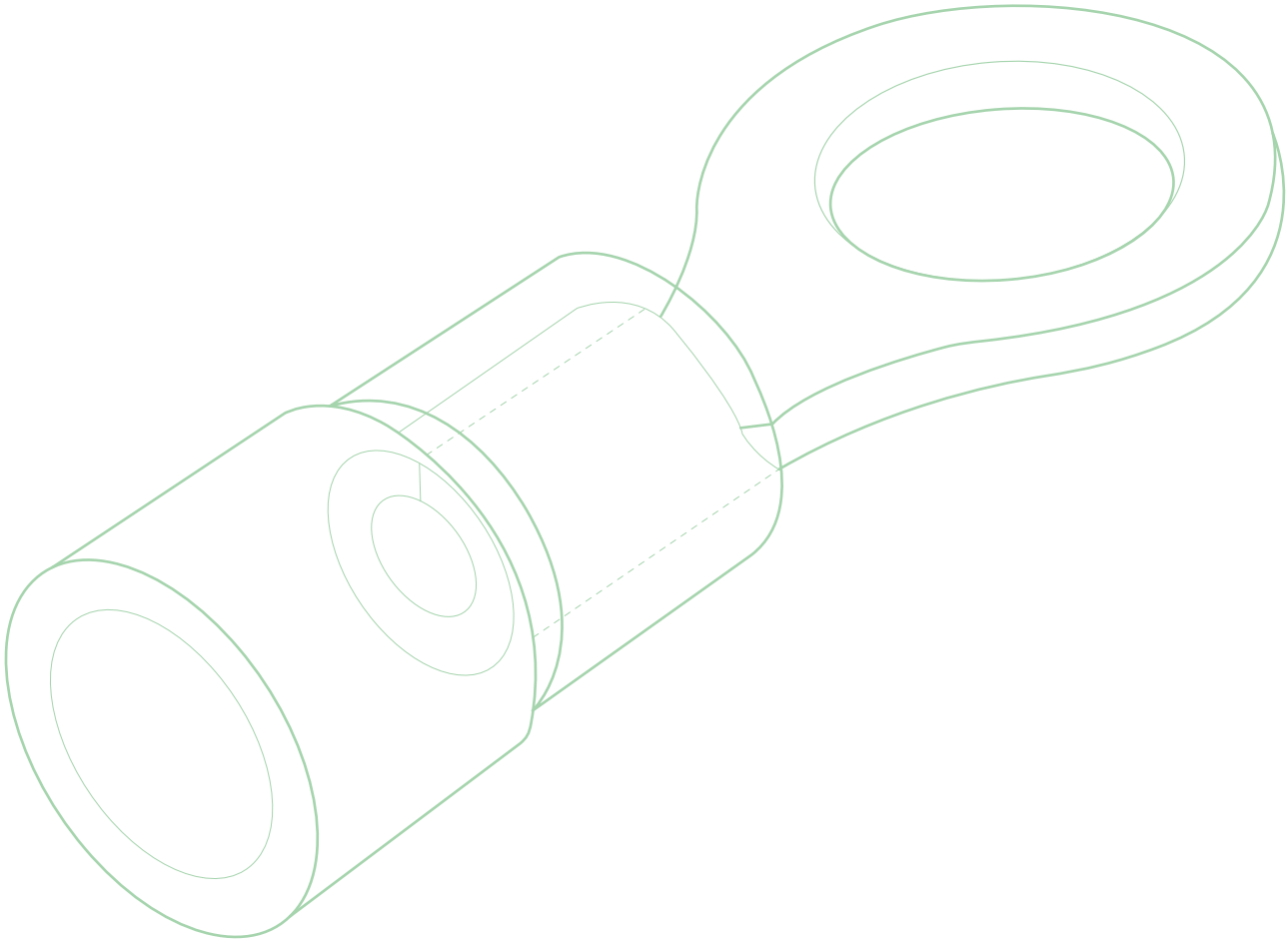

CNHOWDER®

High Quality Low Price Fast Delivery

质量好 价格优 交期快

CNHOWDER®

绿色能源 需要我们共同努力

Green energy us to work together


CHOWDER

# Brief introduction

# 企业简介

Security,
we want you to be more
comprehensive.

温州奥锐卡电子科技有限公司创始于2014年，公司主要生产冷压接线端子及接头，贯通式接线端子，电缆接头等连接器，并通过ISO9001质量管理体系认证.

公司注重做好产品的每一个细节,不断创新,争当该领域的领先地位,成为全球优秀供应商. 产品通过CE, SGS 等认证, 出口南美,欧洲,美洲等地.

公司以”为客户创造独特价值”为自己的价值观,建立超强执行力团队,齐心为客户服务. 加强企业内部管理,不断注入新的发展动力. 欢迎海内外客商携手共进.

WENZHOU HOWDER ELECTRONIC TECHNOLOGY CO. , LTD since 2014, is a professional manufacturer of electrical terminals and connectors. Our company has carried out ISO9001 quality management system. Almost all of our products have attained CE and SGS certifications. Our comprehensive range includes Insulated terminals, no-insulated terminals, insulated quick disconnectors,cord end terminals, Lugs, Splices, etc. Our service is backed by a professional technical support team that is ready to help you provide the optimum solution to every application. You can find quality products with competitive prices here. Just enjoy the benefits of buying from HOWDER!

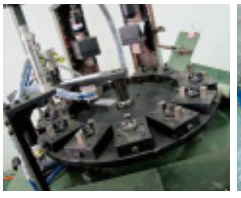

CNHOWDER®

# Qualification Certificate

奥锐卡在材料上选择优质铜板、铜带。端子的铜质、厚度、电镀处理，都会直接影响电流的负载量，不按标准生产会导致接头过热。我们厂是按照美规生产，与我公司目录上所标明的数据是一致的。在制作上我们有严格的管理，每一道工序都是仔细生产，成品出厂不合格率不超过千分之二(行业标准是千分之五)。在焊接方面我们是使用高强度的焊丝焊接口，用标准的压线钳压三分之二不会开裂，在拉力方面达到国际拉力标准。我们是采用纯锡环保哑光电镀，达到欧盟ROHS环保要求，阻值小，不变色。

CNHOWDER terminals in materials is to select the high quality copper, copper strip. The terminal plating on copper, thickness processing will directly affect the amount of load current not complying with the standard production would cause the connector to overheat, our factory is in accordance with the American production is consistent with data specified by out company directory. In production, we have strict management each process is carefully production. finished products factory failure rate does not exceed 2 per thousand (the industry standard is 5 per thousand). We are using welding flux cored wire welding of high strength cast, using the standard crimping pliers two-thirds will not crack in the area of tension reached the international standard tension. we are using pure green matte tin plating to the European ROHS environmental protection requirements the resistance of small no color change.

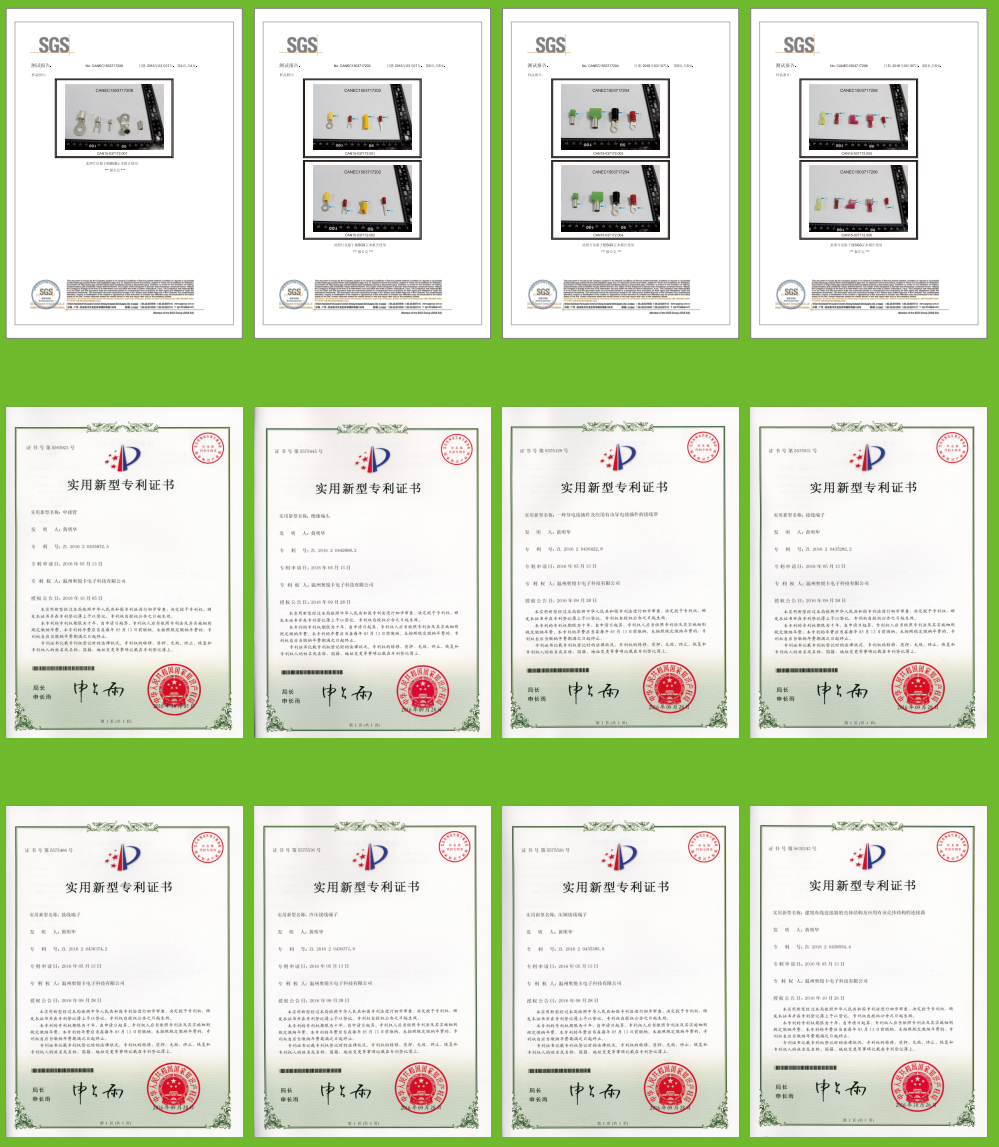


Green, Energy–saving Electric Power
Fittings Advocates

# Products Contents

# 产品目录

Security,
we want you to be more
comprehensive.


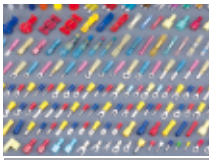

A

端子概述
Terminals Introduction

**001<004**

B

PVC / 尼龙 / 热缩绝缘端子
Vinyl / Nylon / Heat shrinkable
–Insulated Copper Terminals
**005<026**

C

裸端子
Non-Insulated Copper
Terminals
**027<036**

D

PVC / 尼龙 / 热缩快速连接端子
Vinyl / Nylon / Heat shrinkable–Insulated
Quick Disconnectors
**037<046**

E

中接管及其它连接器
Butt Splice & Other
Connectors
**047<055**

F

欧式管形端子
Cord End Terminals

**050<067**

H

配线器材
Wiring Accessories

**068<087**

I

铜管端子
Copper Tube Terminals

**088<103**

A

# **DESCRIPTION 1**
# BARREL TYPES

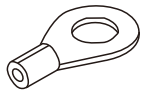

## NB类 NB TYPE

端头(裸)尾部焊缝
NON-INSULATED BRAZED SEAM TERMINAL

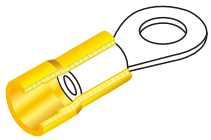

## V类 V TYPE

端头尾部套PVC绝缘套
VINYL INSULATED SINGLE CRIMP TERMINAL

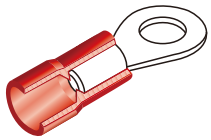

## NY类 NY TYPE

端头尾部套尼龙绝缘套
NYLON INSULATED SINGLE CRIMP TERMINAL

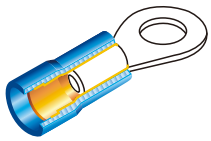

## D类 D TYPE

端头尾部镶铜套再套PVC绝缘套
VINYL INSULATED DOUBLE CRIMP TERMINAL
(WITH EASY ENTRY COPPER SLEEVE)

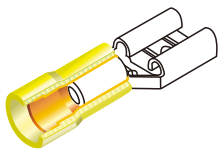

## FD类 FD TYPE

端头尾部镶铜套再套PC绝缘套
PC INSULATED DOUBLE CRIMP TERMINAL
(WITH EASY ENTRY COPPER SLEEVE)

## CNXI NUMBER CONSTITUTION

**Terminals**

R NYD 1.25 - 4 S

- S — Tongue width
- 4 — Stud Size
- 1.25 — Wire Size
- NYD — Type of insulation
- R — Type of terminals

**Connectors**

FD NYD 1.25 - 250

- 250 — Tab size
- 1.25 — Wire Size
- NYD — Type of Insulation
- FD — Type of Connectors

A

Description 1

| Type | Type of Terminals | Type of Insulation | Wire Size | Size | Tongue Width |
|---|---|---|---|---|---|
| Ring Terminals | R | NYD | 1.25 – | 3.7 | S |
| Spade Terminals | S | D | 2 – | 4 | M |
| Locking Spade Terminals | LS | | | | |
| Flange Spade terminals | FS | | | | |
| Hook Terminals | H | NY | 5.5 – | 5 | |
| Blade Terminals | DB | | | | |
| Lipped Blade Terminals | LB | | | | |
| Pin Terminals | PT | V | 1.25 – | 10 | |
| Flag Terminals | FG | | | | |
| DIN-Ring Terminals | DR | | | | |
| DIN-Spade Terminals | DS | | | | |
| Female Disconnects | FD | NYD | 5.5 – | 250 | |
| Male Disconnects | MD | | | | |
| Female Disconnects--Fully Insulated | FDF | NYD | 2 – | 250 | |
| Flag Female Disconnects | FLD | NYD | 1.25 – | 250 | |
| Piggy Back Disconnects | PBD | | | | |
| Female Receptacle Disconnects | FR | | | | |
| Male Bullet Disconnects | MP | | | | |
| Closed End Connectors | CE | | 1.25 | | |
| Butt connectors | B | V | 2 | | |
| Cord End Terminals | E | | 75 – | 12 | |

Description 2

## Type of insulation

| Crimp Type | Type of Insulation | Insulation Material | Temperature Rating |
|---|---|---|---|
| Nylon Insulated-Single Crimp | NY | Nylon | 105℃ |
| Vinyl Insulated-Double Crimp | D | Vinyl | 75℃ |
| Vinyl Insulated-Single Crimp | V | Vinyl | 75℃ |
| Non-Insulated with Brazed seam | NB | | |

A

## Description 3

| APPLICABLE TERMINALS | AREA mm² INSULATED COLOR CODE | | | | | WIRE SIZE | | | | TENSILE STRENGTH | | MAX CURRENT (A) |
|---|---|---|---|---|---|---|---|---|---|---|---|---|
| | | | | | | mm² | AWG | DIAMETER (mm) | AREA (mm²) | JIS-2805 (kgf) | UL-486A (kgf) | |
| 0.5 | 0.10-0.4 Yellow | | | | | 0.12 | 26 | 0.4050 | 0.129 | | 1.37 | |
| | | | | | | 0.2 | 24 | 0.5110 | 0.205 | | 2.27 | |
| | | | | | | 0.3 | 22 | 0.6440 | 0.326 | | 3.63 | 9 |
| 1.25 | | 0.25-1.65 Red | | | | 0.5 | 20 | 0.8120 | 0.518 | | 5.90 | 12 |
| | | | | | | 0.75 | 18 | 1.0240 | 0.823 | | 9.07 | 17 |
| 2 | | | 1.04-2.63 Blue | | | 1.25 | 16 | 1.2910 | 1.309 | 20.400 | 13.61 | 19 |
| | | | | | | 2 | 14 | 1.6280 | 2.081 | 29.580 | 22.68 | 27 |
| 3.5 | | | | 2.63-4.6 Black | | 3.5 | 12 | 2.0530 | 3.310 | 55.080 | 31.75 | 37 |
| 5.5 | | | | | 2.63-6.64 Yellow | 5.5 | 10 | 2.5880 | 5.260 | 79.560 | 36.29 | 48 |
| 8 | | | | | 6.64-10.52 Red | 8 | 8 | 3.2640 | 8.368 | 99.968 | 40.82 | 62 |
| 14 | | | | | 10.52-16.78 Blue | 14 | 6 | 4.1150 | 13.300 | 142.800 | 45.36 | 88 |
| 22 | | | | | 16.78-26.66 Yellow | 22 | 4 | 5.1890 | 21.150 | 183.600 | 63.50 | 115 |
| 38 | | | | | 26.66-42.42 Red | 38 | 2 | 6.540 | 33.600 | 255.000 | 81.65 | 160 |
| 60 | | | | | 42.42-60.57 Blue | 60 | 1/0 | 8.400 | 55.500 | 326.400 | 113.40 | 215 |
| 80 | | | | | 76.28-96.30 Yellow | 80 | 3/0 | 10.400 | 84.950 | 357.000 | 158.75 | 255 |
| 100 | | | | | 96.30-117.2 Bed | 100 | 4/0 | 11.680 | 107.150 | 397.800 | 204.11 | 300 |
| 150 | | | | | 117.20-152.05 | 150 | 300 | 19.910 | 151.950 | 418.200 | 249.47 | 395 |
| 200 | | | | | 192.6-242.27 | 200 | 400 | 16.060 | 202.600 | 448.800 | 294.83 | 470 |
| 325 | | | | | 24.27-325.0 | 325 | 600 | 19.670 | 303.900 | 489.600 | 408.22 | 650 |

Note: Advise to use standard electrical wires or which have attestation to work together with KSR products.

## STUD SIZE

| STANDARD SIZE | STUD SIZE | | HOLE SIZE | |
|---|---|---|---|---|
| | (Inch) | (mm) | (mm) | (Inch) |
| | #2 | 2.0 | 2.2 | .087 " |
| | #3 | 2.5 | 2.7 | .106 " |
| | #4 | 3.0 | 3.2 | .126 " |
| | #6 | 3.5 | 3.7 | .146 " |
| | #8 | 4.0 | 4.3 | .169 " |
| | #10 | 5.0 | 5.3 | .209 " |
| | 1/4 " | 6.0 | 6.4 | .252 " |
| | 5/16 " | 8.0 | 8.4 | .331 " |
| | 3/8 " | 10.0 | 10.5 | .413 " |
| | 7/16 " | 11.0 | 11.5 | .453 " |
| | 1 /2 " | 12.0 | 13.0 | .512 " |
| | 9/16 " | 14.0 | 15.0 | .591 " |
| | 5/8 " | 16.0 | 17.0 | .669 " |
| | 11/16 " | 18.0 | 19.0 | .748 " |
| | 3 /4 " | 20.0 | 21.0 | .827 " |
| | 7/8 " | 22.0 | 23.0 | .906 " |
| | 15/16 " | 24.0 | 25.0 | .984 " |

## TAB SIZE

Description

| SERIES | TAB SIZE(w) | |
|---|---|---|
| | (Inch) | (mm) |
| 110 | .110×.020 "<br>.110×.032 " | 2.8×0.5<br>2.8×0.8 |
| 187 | .187×.020 "<br>.187×.032 " | 4.75×0.5<br>4.75×0.8 |
| 205 | .205×.020 "<br>.205×.032 " | 5.2×0.5<br>5.2×0.8 |
| 250 | .250×.032 " | 6.35×0.8 |
| 312 | .312×.032 " | 8.0×0.8 |
| 375 | .375×.047 " | 9.4×1.2 |


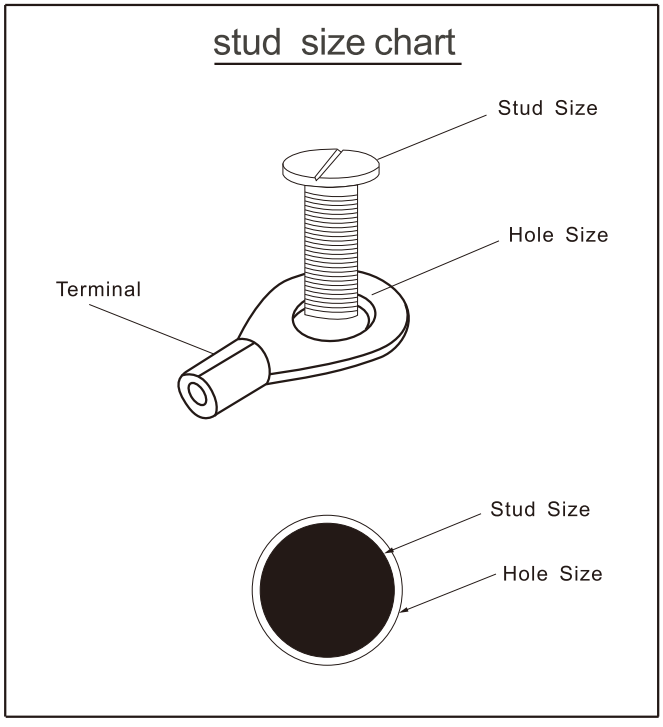


Note: The charts shows standard size just for consulting, specified dimensions ]subject to stud size and hole size.

# PVC / 尼龍 / 熱縮 絕緣端子

## Vinyl / Nylon / Heat shrinkable–Insulated Copper Terminals

www.cnhowder.com

## Vinyl-Insulated Ring Terminals

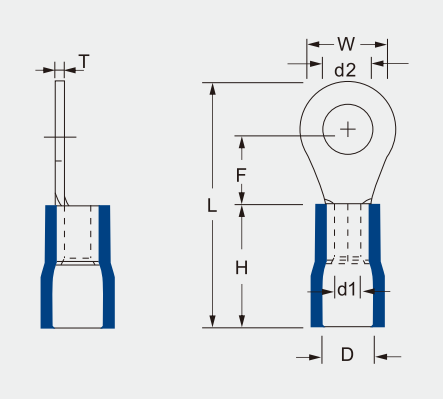


- Maximum electrical rating: 600 volts
- Maximum temperature: 75℃
- Terminals material : copper
- Plating: Tin plated
- Insulation material: vinyl (PVC)

CE SGS RoHS

B

| ITEM NO . | STUD SIZE | | DIMENSION mm | | | | | | | | PCS/ PACK | COLOR | EXPLANATION |
|---|---|---|---|---|---|---|---|---|---|---|---|---|---|
| | Metric | American | d2 | W | F | L | H | d1 | D | T | | | |
| RV1.25-3.2 | 3 | #4 | 3.2 | 5.7 | 4.95 | 17.8 | 10.0 | 1.7 | 4.2 | 0.8 | 100 | Red | Wire range: 0.5-1.5mm² A. W. G.: (22-16) Max.current=19A |
| RV1.25-3.5S | 3.5 | #6 | 3.7 | | | | | | | | | | |
| RV1.25-3.5M | 3.5 | #6 | 3.7 | 6.6 | 6.3 | 19.6 | | | | | | | |
| RV1.25-3.5L | 3.5 | #6 | 3.7 | 8.0 | 7.0 | 21.0 | | | | | | | |
| RV1.25-4S | 4 | #8 | 4.3 | 6.6 | 6.3 | 19.6 | | | | | | | |
| RV1.25-4L | 4 | #8 | 4.3 | 8.0 | 7.0 | 21.0 | | | | | | | |
| RV1.25-5 | 5 | #10 | 5.3 | | | | | | | | | | |
| RV1.25-5L | 5 | #10 | 5.3 | 9.5 | 7.5 | 22.3 | | | | | | | |
| RV1.25-6 | 6 | 1/ 4 " | 6.5 | 11.6 | 11.2 | 27.0 | | | | | | | |
| RV1.25-8 | 8 | 5/16 " | 8.5 | | | | | | | | | | |
| RV1.25-10 | 10 | 3/8 " | 10.5 | 13.6 | 13.9 | 30.7 | | | | | | | |
| RV1.25-12 | 12 | 1 /2 " | 13.0 | 19.2 | 16.0 | 35.6 | | | | | | | |
| RV2-3.2 | 3 | #4 | 3.2 | 6.6 | 6.4 | 19.7 | 10.0 | 2.3 | 4.7 | 0.8 | 100 | Blue | Wire range : 1.5-2.5mm² A. W. G. : (16-14) Max.current=27A |
| RV2-3.5 | 3.5 | #6 | 3.7 | | | | | | | | | | |
| RV2-3.5M | 3.5 | #6 | 3.7 | 6.6 | 7.9 | 21.2 | | | | | | | |
| RV2-3.5L | 3.5 | #6 | 3.7 | 8.5 | 7.75 | 22.0 | | | | | | | |
| RV2-4S | 4 | #8 | 4.3 | 6.6 | 7.9 | 21.2 | | | | | | | |
| RV2-4L | 4 | #8 | 4.3 | 8.5 | 7.75 | 22.0 | | | | | | | |
| RV2-5S | 5 | #10 | 5.3 | | | | | | | | | | |
| RV2-5L | 5 | #10 | 5.3 | 9.5 | 7.5 | 22.3 | | | | | | | |
| RV2-6 | 6 | 1/ 4 " | 6.5 | 12.0 | 11.0 | 27.0 | | | | | | | |
| RV2-8 | 8 | 5/16 " | 8.5 | 12.0 | 11.0 | 27.0 | | | | | | | |
| RV2-10 | 10 | 3/8 " | 10.5 | 13.6 | 13.9 | 30.7 | | | | | | | |
| RV2-12 | 12 | 1 /2 " | 13.0 | 19.2 | 16.0 | 35.6 | | | | | | | |
| RV3.5-4 | 4 | #8 | 4.3 | 8.0 | 7.7 | 24.7 | 13.0 | 2.9 | 6.2 | 1.0 | 100 | Black | Wire range : 2.5-4mm² A. W. G. : (14-12) Max.current=37A |
| RV3.5-5S | 5 | #10 | 5.3 | | | | | | | | | | |
| RV3.5-6 | 6 | 1 /4 " | 6.5 | 12.0 | 9.4 | 28.4 | | | | | | | |
| RV3.5-8 | 8 | 5 /16 " | 8.5 | 15.0 | 13.5 | 34.0 | | | | | | | |

B

## Vinyl-Insulated Ring Terminals

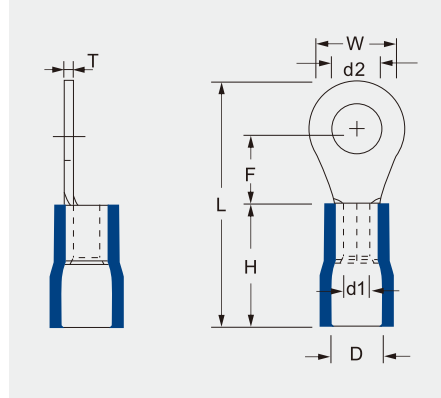


- Maximum electrical rating: 600 volts
- Maximum temperature: 75℃
- Terminals material : copper
- Plating: Tin plated
- Insulation material: vinyl (PVC)

CE SGS RoHS

| ITEM NO. | STUD SIZE | | DIMENSION mm | | | | | | | | PCS/ PACK | COLOR | EXPLANATION |
|---|---|---|---|---|---|---|---|---|---|---|---|---|---|
| | Metric | American | d2 | W | F | L | H | d1 | D | T | | | |
| RV5.5-3.5 | 3.5 | #6 | 3.7 | 7.2 | 5.9 | 22.5 | 13.0 | 3.4 | 6.5 | 1.0 | 100 | Yellow | Wire range : 4-6mm² A. W. G. : (12-10) Max.current=48A |
| RV5.5-4S | 4 | #8 | 4.3 | | | | | | | | | | |
| RV5.5-4L | 4 | #8 | 4.3 | 9.5 | 8.85 | 26.6 | | | | | | | |
| RV5.5-5 | 5 | #10 | 5.3 | | | | | | | | | | |
| RV5.5-6 | 6 | 1/ 4 " | 6.5 | 12.0 | 10.5 | 29.5 | | | | | | | |
| RV5.5-8 | 8 | 5/16 " | 8.5 | 15.0 | 13.5 | 34.0 | | | | | | | |
| RV5.5-10 | 10 | 3/8 " | 10.5 | | | | | | | | | | |
| RV5.5-12 | 12 | 1 /2 " | 13.0 | 19.2 | 16.0 | 38.6 | | | | | | | |
| RV8-4S | 4.0 | #8 | 4.3 | 8 | 9.3 | 29.3 | 16.0 | 4.5 | 8.0 | 1.2 | 100 | Red | Wire range : 6-10mm² A. W. G. : (8) Max.current=62A |
| RV8-5S | 5.0 | #10 | 5.3 | 8.8 | 9.3 | 29.7 | | | | | | | |
| RV8-5M | 5.0 | #10 | 5.3 | 12.0 | 9.3 | 31.3 | | | | | | | |
| RV8-5L | 5.0 | #10 | 5.3 | 15.0 | 13.8 | 37.3 | | | | | | | |
| RV8-6S | 6.0 | 1/4 " | 6.5 | 12.0 | 9.3 | 31.3 | | | | | | | |
| RV8-8 | 8 | 5/16 " | 8.5 | 15.0 | 11.1 | 37.3 | | | | | | | |
| RV8-10 | 10 | 3/8 " | 10.5 | | | | | | | | | | |
| RV8-12 | 12 | 1/2 " | 13.0 | 20.0 | 15.0 | 41.0 | | | | | | | |
| RV14-4 | 4 | #8 | 4.3 | 12.0 | 13.3 | 40.8 | 21.5 | 5.4 | 11.0 | 1.4 | 50 | Blue | Wire range : 10-16mm² A. W. G. : (6) Max.current=88A |
| RV14-5 | 5 | #10 | 5.3 | | | | | | | | | | |
| RV14-6S | 6 | 1/4 " | 6.5 | | | | | | | | | | |
| RV14-8 | 8 | 5/16 " | 8.5 | 16.0 | 14.5 | 43.5 | | | | | | | |
| RV14-10 | 10 | 3/8 " | 10.5 | | | | | | | | | | |
| RV14-12 | 12 | 1/2 " | 13.0 | 22.0 | 19.5 | 52.0 | | | | | | | |
| RV22-5S | 5 | #10 | 5.3 | 12.2 | 15.1 | 44.7 | 23.5 | 7.7 | 13.0 | 1.6 | 50 | Yellow | Wire range : 16-25mm² A. W. G. : (4) Max.current=115A |
| RV22-6S | 6 | 1/4 " | 6.5 | 12.2 | 15.1 | 44.7 | | | | | | | |
| RV22-8 | 8 | 5/16 " | 8.5 | 16.5 | 13.5 | 45.2 | | | | | | | |
| RV22-10 | 10 | 3/8 " | 10.5 | | | | | | | | | | |
| RV22-12 | 12 | 1/2 " | 13.0 | 22.0 | 19.5 | 54.0 | | | | | | | |
| RV38-5 | 5 | #10 | 5.3 | 15.3 | 17.4 | 52.0 | 27.0 | 9.4 | 14.5 | 1.7 | 20 | Red | Wire range : 35mm² A. W. G. : (2) Max.current=160A |
| RV38-6 | 6 | 1/4 " | 6.5 | | | | | | | | | | |
| RV38-8S | 8 | 5/16 " | 8.5 | | | | | | | | | | |
| RV38-10S | 10 | 3/8 " | 10.5 | 15.3 | 17.4 | 52.0 | | | | | | | |
| RV38-12 | 12 | 1/2 " | 13.0 | 22.0 | 17.7 | 55.7 | | | | | | | |

## Vinyl-Insulated Ring Terminals
## Easy Entry

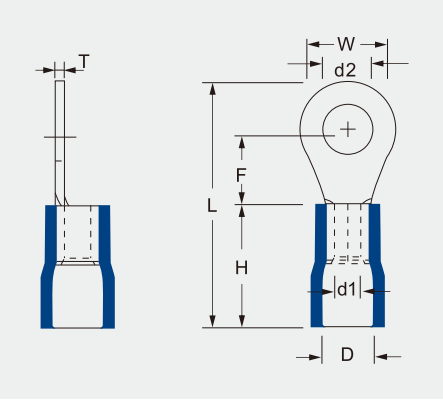


- Maximum electrical rating: 600 volts
- Maximum temperature: 75℃
- Terminals material : copper
- Plating: Tin plated
- Insulation material: easy entry vinyl

CE SGS RoHS

B

| ITEM NO . | STUD SIZE | | DIMENSION mm | | | | | | | | PCS/ PACK | COLOR | EXPLANATION |
|---|---|---|---|---|---|---|---|---|---|---|---|---|---|
| | Metric | American | d2 | W | F | L | H | d1 | D | T | | | |
| ERV1.25-3.2 | 3 | #4 | 3.2 | 5.7 | 4.95 | 17.8 | 10.0 | 1.7 | 4.2 | 0.8 | 100 | Red | Wire range: 0.5-1.5mm² A. W. G.: (22-16) Max.current=19A |
| ERV1.25-3.5S | 3.5 | #6 | 3.7 | | | | | | | | | | |
| ERV1.25-3.5M | 3.5 | #6 | 3.7 | 6.6 | 6.3 | 19.6 | | | | | | | |
| ERV1.25-3.5L | 3.5 | #6 | 3.7 | 8.0 | 7.0 | 21.0 | | | | | | | |
| ERV1.25-4S | 4 | #8 | 4.3 | 6.6 | 6.3 | 19.6 | | | | | | | |
| ERV1.25-4L | 4 | #8 | 4.3 | 8.0 | 7.0 | 21.0 | | | | | | | |
| ERV1.25-5 | 5 | #10 | 5.3 | | | | | | | | | | |
| ERV1.25-5L | 5 | #10 | 5.3 | 9.5 | 7.5 | 22.3 | | | | | | | |
| ERV1.25-6 | 6 | 1/ 4 " | 6.5 | 11.6 | 11.2 | 27.0 | | | | | | | |
| ERV1.25-8 | 8 | 5/16 " | 8.5 | | | | | | | | | | |
| ERV1.25-10 | 10 | 3/8 " | 10.5 | 13.6 | 13.9 | 30.7 | | | | | | | |
| ERV1.25-12 | 12 | 1 /2 " | 13.0 | 19.2 | 16.0 | 35.6 | | | | | | | |
| ERV2-3.2 | 3 | #4 | 3.2 | 6.6 | 6.4 | 19.7 | 10.0 | 2.3 | 4.7 | 0.8 | 100 | Blue | Wire range : 1.5-2.5mm² A. W. G. : (16-14) Max.current=27A |
| ERV2-3.5 | 3.5 | #6 | 3.7 | | | | | | | | | | |
| ERV2-3.5M | 3.5 | #6 | 3.7 | 6.6 | 7.9 | 21.2 | | | | | | | |
| ERV2-3.5L | 3.5 | #6 | 3.7 | 8.5 | 7.75 | 22.0 | | | | | | | |
| ERV2-4S | 4 | #8 | 4.3 | 6.6 | 7.9 | 21.2 | | | | | | | |
| ERV2-4L | 4 | #8 | 4.3 | 8.5 | 7.75 | 22.0 | | | | | | | |
| ERV2-5S | 5 | #10 | 5.3 | | | | | | | | | | |
| ERV2-5L | 5 | #10 | 5.3 | 9.5 | 7.5 | 22.3 | | | | | | | |
| ERV2-6 | 6 | 1/ 4 " | 6.5 | 12.0 | 11.0 | 27.0 | | | | | | | |
| ERV2-8 | 8 | 5/16 " | 8.5 | 12.0 | 11.0 | 27.0 | | | | | | | |
| ERV2-10 | 10 | 3/8 " | 10.5 | 13.6 | 13.9 | 30.7 | | | | | | | |
| ERV2-12 | 12 | 1 /2 " | 13.0 | 19.2 | 16.0 | 35.6 | | | | | | | |
| ERV5.5-3.5 | 3.5 | #6 | 3.7 | 7.2 | 5.9 | 22.5 | 13.0 | 3.4 | 6.5 | 1.0 | 100 | Yellow | Wire range : 4-6mm² A. W. G. : (12-10) Max.current=48A |
| ERV5.5-4S | 4 | #8 | 4.3 | | | | | | | | | | |
| ERV5.5-4L | 4 | #8 | 4.3 | 9.5 | 8.85 | 26.6 | | | | | | | |
| ERV5.5-5 | 5 | #10 | 5.3 | | | | | | | | | | |
| ERV5.5-6 | 6 | 1/ 4 " | 6.5 | 12.0 | 10.5 | 29.5 | | | | | | | |
| ERV5.5-8 | 8 | 5/16 " | 8.5 | 15.0 | 13.5 | 34.0 | | | | | | | |
| ERV5.5-10 | 10 | 3/8 " | 10.5 | | | | | | | | | | |
| ERV5.5-12 | 12 | 1 /2 " | 13.0 | 19.2 | 16.0 | 38.6 | | | | | | | |

B

## Vinyl-Insulated Ring Terminals
## Double Crimp

- Maximum electrical rating: 600 volts
- Maximum temperature: 75℃
- Terminals material : copper
- Plating: Tin plated
- Insulation material: vinyl (PVC)
- Double crimp: with copper sleeve on barrel

CE SGS RoHS

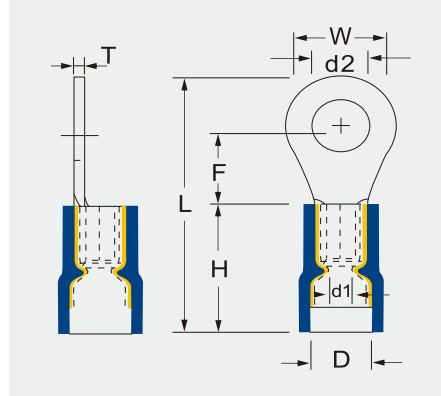


| ITEM NO . | STUD SIZE | | DIMENSION mm | | | | | | | | PCS/ PACK | COLOR | EXPLANATION |
|---|---|---|---|---|---|---|---|---|---|---|---|---|---|
| | Metric | American | d2 | W | F | L | H | d1 | D | T | | | |
| RV1.25-3.2D | 3 | #4 | 3.2 | 5.7 | 4.95 | 17.8 | 10.0 | 1.7 | 4.5 | 0.8 | 100 | Red | Wire range : 0.5-1.5mm² A. W. G. : (22-16) Max.current=19A |
| RV1.25-3.5SD | 3.5 | #6 | 3.7 | | | | | | | | | | |
| RV1.25-3.5MD | 3.5 | #6 | 3.7 | 6.6 | 6.3 | 19.6 | | | | | | | |
| RV1.25-3.5LD | 3.5 | #6 | 3.7 | 8.0 | 7.0 | 21.0 | | | | | | | |
| RV1.25-4SD | 4 | #8 | 4.3 | 6.6 | 6.3 | 19.6 | | | | | | | |
| RV1.25-4LD | 4 | #8 | 4.3 | 8.0 | 7.0 | 21.0 | | | | | | | |
| RV1.25-5D | 5 | #10 | 5.3 | | | | | | | | | | |
| RV1.25-5LD | 5 | #10 | 5.3 | 9.5 | 7.5 | 22.3 | | | | | | | |
| RV1.25-6D | 6 | 1/ 4 " | 6.5 | 11.6 | 11.2 | 27.0 | | | | | | | |
| RV1.25-8D | 8 | 5/16 " | 8.5 | | | | | | | | | | |
| RV1.25-10D | 10 | 3/8 " | 10.5 | 13.6 | 13.9 | 30.7 | | | | | | | |
| RV1.25-12D | 12 | 1 /2 " | 13.0 | 19.2 | 16.0 | 35.6 | | | | | | | |
| RV2-3.2D | 3 | #4 | 3.2 | 6.6 | 6.4 | 19.7 | 10.0 | 2.3 | 5.0 | 0.8 | 100 | Blue | Wire range : 1.5-2.5mm² A. W. G. : (16-14) Max.current=27A |
| RV2-3.5SD | 3.5 | #6 | 3.7 | | | | | | | | | | |
| RV2-3.5MD | 3.5 | #6 | 3.7 | 6.6 | 7.9 | 21.2 | | | | | | | |
| RV2-3.5LD | 3.5 | #6 | 3.7 | 8.5 | 7.75 | 22.0 | | | | | | | |
| RV2-4SD | 4 | #8 | 4.3 | 6.6 | 7.9 | 21.2 | | | | | | | |
| RV2-4LD | 4 | #8 | 4.3 | 8.5 | 7.75 | 22.0 | | | | | | | |
| RV2-5SD | 5 | #10 | 5.3 | | | | | | | | | | |
| RV2-5LD | 5 | #10 | 5.3 | 9.5 | 7.5 | 22.3 | | | | | | | |
| RV2-6D | 6 | 1/ 4 " | 6.5 | 12.0 | 11.0 | 27.0 | | | | | | | |
| RV2-8D | 8 | 5/16 " | 8.5 | 12.0 | 11.0 | 27.0 | | | | | | | |
| RV2-10D | 10 | 3/8 " | 10.5 | 13.6 | 13.9 | 30.7 | | | | | | | |
| RV2-12D | 12 | 1 /2 " | 13.0 | 19.2 | 16.0 | 35.6 | | | | | | | |
| RV5.5-3.5D | 3.5 | #6 | 3.7 | 7.2 | 5.9 | 22.5 | 13.0 | 3.4 | 6.7 | 1.0 | 100 | Yellow | Wire range : 4-6mm² A. W. G. : (12-10) Max.current=48A |
| RV5.5-4SD | 4 | #8 | 4.3 | | | | | | | | | | |
| RV5.5-4LD | 4 | #8 | 4.3 | 9.5 | 8.85 | 26.6 | | | | | | | |
| RV5.5-5D | 5 | #10 | 5.3 | | | | | | | | | | |
| RV5.5-6D | 6 | 1/ 4 " | 6.5 | 12.0 | 10.5 | 29.5 | | | | | | | |
| RV5.5-8D | 8 | 5/16 " | 8.5 | 15.0 | 13.5 | 34.0 | | | | | | | |
| RV5.5-10D | 10 | 3/8 " | 10.5 | | | | | | | | | | |
| RV5.5-12D | 12 | 1 /2 " | 13.0 | 19.2 | 16.0 | 38.6 | | | | | | | |

## Nylon-Insulated Ring Terminals

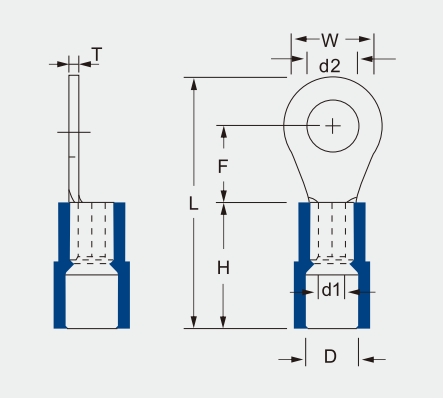


- Maximum electrical rating: 600 volts
- Maximum temperature: 105℃
- Terminals material : copper
- Plating: Tin plated
- Insulation material: easy entry nylon

CE SGS RoHS

B

| ITEM NO . | STUD SIZE | | DIMENSION mm | | | | | | | | PCS/ PACK | COLOR | EXPLANATION |
|---|---|---|---|---|---|---|---|---|---|---|---|---|---|
| | Metric | American | d2 | W | F | L | H | d1 | D | T | | | |
| RNY1.25-3.2 | 3 | #4 | 3.2 | 5.7 | 4.95 | 18.8 | 11.0 | 1.7 | 4.3 | 0.8 | 100 | Red | Wire range : 0.5-1.5mm² A. W. G. : (22-16) Max.current=19A |
| RNY1.25-3.5S | 3.5 | #6 | 3.7 | | | | | | | | | | |
| RNY1.25-3.5M | 3.5 | #6 | 3.7 | 6.6 | 6.3 | 20.6 | | | | | | | |
| RNY1.25-3.5L | 3.5 | #6 | 3.7 | 8.0 | 7.0 | 22.0 | | | | | | | |
| RNY1.25-4S | 4 | #8 | 4.3 | 6.6 | 6.3 | 20.6 | | | | | | | |
| RNY1.25-4L | 4 | #8 | 4.3 | 8.0 | 7.0 | 22.0 | | | | | | | |
| RNY1.25-5 | 5 | #10 | 5.3 | | | | | | | | | | |
| RNY1.25-5L | 5 | #10 | 5.3 | 9.5 | 7.5 | 23.3 | | | | | | | |
| RNY1.25-6 | 6 | 1/ 4 " | 6.5 | 11.6 | 11.2 | 28.0 | | | | | | | |
| RNY1.25-8 | 8 | 5/16 " | 8.5 | | | | | | | | | | |
| RNY1.25-10 | 10 | 3/8 " | 10.5 | 13.6 | 13.9 | 31.7 | | | | | | | |
| RNY1.25-12 | 12 | 1 /2 " | 13.0 | 19.2 | 16.0 | 36.6 | | | | | | | |
| RNY2-3.2 | 3 | #4 | 3.2 | 6.6 | 6.4 | 20.7 | 11.0 | 2.3 | 4.8 | 0.8 | 100 | Blue | Wire range : 1.5-2.5mm² A. W. G. : (16-14) Max.current=27A |
| RNY2-3.5 | 3.5 | #6 | 3.7 | | | | | | | | | | |
| RNY2-3.5M | 3.5 | #6 | 3.7 | 6.6 | 7.9 | 22.2 | | | | | | | |
| RNY2-3.5L | 3.5 | #6 | 3.7 | 8.5 | 7.75 | 23.0 | | | | | | | |
| RNY2-4S | 4 | #8 | 4.3 | 6.6 | 7.9 | 22.2 | | | | | | | |
| RNY2-4L | 4 | #8 | 4.3 | 8.5 | 7.75 | 23.0 | | | | | | | |
| RNY2-5S | 5 | #10 | 5.3 | | | | | | | | | | |
| RNY2-5L | 5 | #10 | 5.3 | 9.5 | 7.5 | 23.3 | | | | | | | |
| RNY2-6 | 6 | 1/ 4 " | 6.5 | 12.0 | 11.0 | 28.0 | | | | | | | |
| RNY2-8 | 8 | 5/16 " | 8.5 | 12.0 | 11.0 | 28.0 | | | | | | | |
| RNY2-10 | 10 | 3/8 " | 10.5 | 13.6 | 13.9 | 31.7 | | | | | | | |
| RNY2-12 | 12 | 1 /2 " | 13.0 | 19.2 | 16.0 | 36.6 | | | | | | | |

B

## Nylon-Insulated Ring Terminals

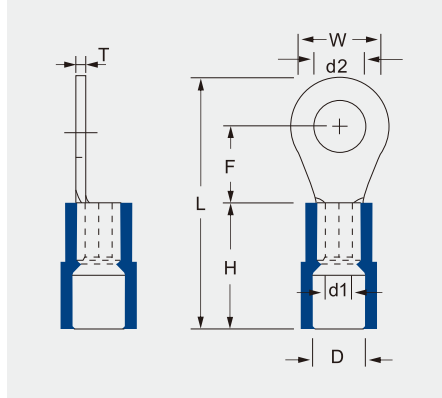


- Maximum electrical rating: 600 volts
- Maximum temperature: 105℃
- Terminals material : copper
- Plating:Tin plated
- Insulation material: easy entry nylon

CE SGS RoHS

| ITEM NO . | STUD SIZE | | DIMENSION mm | | | | | | | | PCS/ PACK | COLOR | EXPLANATION |
|---|---|---|---|---|---|---|---|---|---|---|---|---|---|
| | Metric | American | d2 | W | F | L | H | d1 | D | T | | | |
| RNY5.5-3.5 | 3.5 | #6 | 3.7 | 7.2 | 5.9 | 22.5 | 13.0 | 3.4 | 6.7 | 1.0 | 100 | Yellow | Wire range : 4-6mm² A. W. G. : (12-10) Max.current=48A |
| RNY5.5-4S | 4 | #8 | 4.3 | | | | | | | | | | |
| RNY5.5-4L | 4 | #8 | 4.3 | 9.5 | 8.85 | 26.6 | | | | | | | |
| RNY5.5-5 | 5 | #10 | 5.3 | | | | | | | | | | |
| RNY5.5-6 | 6 | 1/ 4 " | 6.5 | 12.0 | 10.5 | 29.5 | | | | | | | |
| RNY5.5-8 | 8 | 5/16 " | 8.5 | 15.0 | 13.5 | 34.0 | | | | | | | |
| RNY5.5-10 | 10 | 3/8 " | 10.5 | | | | | | | | | | |
| RNY5.5-12 | 12 | 1 /2 " | 13.0 | 19.2 | 16.0 | 38.6 | | | | | | | |
| RNYB8-4S | 4.0 | #8 | 4.3 | 8 | 9.3 | 29.3 | 16.0 | 4.5 | 8.0 | 1.2 | 100 | Red | Wire range : 6-10mm² A. W. G. : (8) Max.current=62A |
| RNYB8-5S | 5.0 | #10 | 5.3 | 8.8 | 9.3 | 29.7 | | | | | | | |
| RNYB8-5M | 5.0 | #10 | 5.3 | 12.0 | 9.3 | 31.3 | | | | | | | |
| RNYB8-5L | 5.0 | #10 | 5.3 | 15.0 | 13.8 | 37.3 | | | | | | | |
| RNYB8-6S | 6.0 | 1/4 " | 6.5 | 12.0 | 9.3 | 31.3 | | | | | | | |
| RNYB8-8 | 8 | 5/16 " | 8.5 | 15.0 | 11.1 | 37.3 | | | | | | | |
| RNYB8-10 | 10 | 3/8 " | 10.5 | | | | | | | | | | |
| RNYB8-12 | 12 | 1/2 " | 13.0 | 20.0 | 15.0 | 41.0 | | | | | | | |
| RNYB14-4 | 4 | #8 | 4.3 | 12.0 | 13.3 | 40.8 | 21.5 | 5.4 | 11.0 | 1.4 | 50 | Blue | Wire range : 10-16mm² A. W. G. : (6) Max.current=88A |
| RNYB14-5 | 5 | #10 | 5.3 | | | | | | | | | | |
| RNYB14-6S | 6 | 1/4 " | 6.5 | | | | | | | | | | |
| RNYB14-8 | 8 | 5/16 " | 8.5 | 16.0 | 14.5 | 43.5 | | | | | | | |
| RNYB14-10 | 10 | 3/8 " | 10.5 | | | | | | | | | | |
| RNYB14-12 | 12 | 1/2 " | 13.0 | 22.0 | 19.5 | 52.0 | | | | | | | |
| RNYB22-5S | 5 | #10 | 5.3 | 12.2 | 15.1 | 44.7 | 23.5 | 7.7 | 13.0 | 1.6 | 50 | Yellow | Wire range : 16-25mm² A. W. G. : (4) Max.current=115A |
| RNYB22-6S | 6 | 1/4 " | 6.5 | 12.2 | 15.1 | 44.7 | | | | | | | |
| RNYB22-8 | 8 | 5/16 " | 8.5 | 16.5 | 13.5 | 45.2 | | | | | | | |
| RNYB22-10 | 10 | 3/8 " | 10.5 | | | | | | | | | | |
| RNYB22-12 | 12 | 1/2 " | 13.0 | 22.0 | 19.5 | 54.0 | | | | | | | |
| RNYB38-5 | 5 | #10 | 5.3 | 15.3 | 17.4 | 52.0 | 27.0 | 9.4 | 14.5 | 1.7 | 20 | Red | Wire range : 35mm² A. W. G. : (2) Max.current=160A |
| RNYB38-6 | 6 | 1/4 " | 6.5 | | | | | | | | | | |
| RNYB38-8S | 8 | 5/16 " | 8.5 | | | | | | | | | | |
| RNYB38-10S | 10 | 3/8 " | 10.5 | 15.3 | 17.4 | 52.0 | | | | | | | |
| RNYB38-12 | 12 | 1/2 " | 13.0 | 22.0 | 17.7 | 55.7 | | | | | | | |

## Nylon-Insulated Ring Terminals
## Double Crimp

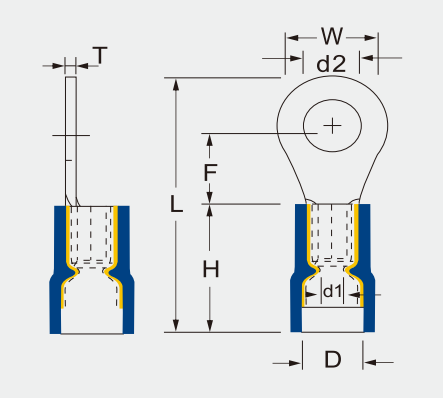


- Maximum electrical rating: 600 volts
- Maximum temperature: 105℃
- Terminals material : copper
- Plating: Tin plated
- Insulation material: easy entry nylon

CE SGS RoHS

B

| ITEM NO . | STUD SIZE | | DIMENSION mm | | | | | | | | PCS/ PACK | COLOR | EXPLANATION |
|---|---|---|---|---|---|---|---|---|---|---|---|---|---|
| | Metric | American | d2 | W | F | L | H | d1 | D | T | | | |
| RNY1.25-3.2D | 3 | #4 | 3.2 | 5.7 | 4.95 | 18.8 | 11.0 | 1.7 | 4.3 | 0.8 | 100 | Red | Wire range : 0.5-1.5mm² A. W. G. : (22-16) Max.current=19A |
| RNY1.25-3.5SD | 3.5 | #6 | 3.7 | | | | | | | | | | |
| RNY1.25-3.5MD | 3.5 | #6 | 3.7 | 6.6 | 6.3 | 20.6 | | | | | | | |
| RNY1.25-3.5LD | 3.5 | #6 | 3.7 | 8.0 | 7.0 | 22.0 | | | | | | | |
| RNY1.25-4SD | 4 | #8 | 4.3 | 6.6 | 6.3 | 20.6 | | | | | | | |
| RNY1.25-4LD | 4 | #8 | 4.3 | 8.0 | 7.0 | 22.0 | | | | | | | |
| RNY1.25-5D | 5 | #10 | 5.3 | | | | | | | | | | |
| RNY1.25-5LD | 5 | #10 | 5.3 | 9.5 | 7.5 | 23.3 | | | | | | | |
| RNY1.25-6D | 6 | 1/ 4 " | 6.5 | 11.6 | 11.2 | 28.0 | | | | | | | |
| RNY1.25-8D | 8 | 5/16 " | 8.5 | | | | | | | | | | |
| RNY1.25-10D | 10 | 3/8 " | 10.5 | 13.6 | 13.9 | 31.7 | | | | | | | |
| RNY1.25-12D | 12 | 1 /2 " | 13.0 | 19.2 | 16.0 | 36.6 | | | | | | | |
| RNY2-3.2D | 3 | #4 | 3.2 | 6.6 | 6.4 | 20.7 | 11.0 | 2.3 | 4.8 | 0.8 | 100 | Blue | Wire range : 1.5-2.5mm² A. W. G. : (16-14) Max.current=27A |
| RNY2-3.5D | 3.5 | #6 | 3.7 | | | | | | | | | | |
| RNY2-3.5MD | 3.5 | #6 | 3.7 | 6.6 | 7.9 | 22.2 | | | | | | | |
| RNY2-3.5LD | 3.5 | #6 | 3.7 | 8.5 | 7.75 | 23.0 | | | | | | | |
| RNY2-4SD | 4 | #8 | 4.3 | 6.6 | 7.9 | 22.2 | | | | | | | |
| RNY2-4LD | 4 | #8 | 4.3 | 8.5 | 7.75 | 23.0 | | | | | | | |
| RNY2-5SD | 5 | #10 | 5.3 | | | | | | | | | | |
| RNY2-5LD | 5 | #10 | 5.3 | 9.5 | 7.5 | 23.3 | | | | | | | |
| RNY2-6D | 6 | 1/ 4 " | 6.5 | 12.0 | 11.0 | 28.0 | | | | | | | |
| RNY2-8D | 8 | 5/16 " | 8.5 | 12.0 | 11.0 | 28.0 | | | | | | | |
| RNY2-10D | 10 | 3/8 " | 10.5 | 13.6 | 13.9 | 31.7 | | | | | | | |
| RNY2-12D | 12 | 1 /2 " | 13.0 | 19.2 | 16.0 | 36.6 | | | | | | | |
| RNY5.5-3.5D | 3.5 | #6 | 3.7 | 7.2 | 5.9 | 22.5 | 13.0 | 3.4 | 6.7 | 1.0 | 100 | Yellow | Wire range : 4-6mm² A. W. G. : (12-10) Max.current=48A |
| RNY5.5-4SD | 4 | #8 | 4.3 | | | | | | | | | | |
| RNY5.5-4LD | 4 | #8 | 4.3 | 9.5 | 8.85 | 26.6 | | | | | | | |
| RNY5.5-5 D | 5 | #10 | 5.3 | | | | | | | | | | |
| RNY5.5-6D | 6 | 1/ 4 " | 6.5 | 12.0 | 10.5 | 29.5 | | | | | | | |
| RNY5.5-8D | 8 | 5/16 " | 8.5 | 15.0 | 13.5 | 34.0 | | | | | | | |
| RNY5.5-10D | 10 | 3/8 " | 10.5 | | | | | | | | | | |
| RNY5.5-12D | 12 | 1 /2 " | 13.0 | 19.2 | 16.0 | 38.6 | | | | | | | |

B

## Insulated Heat Shrinkable Ring Terminals

- Maximum Electrical Rating : 600 Volts
- Shrink Temp 150 ℃
  Operating Temp −10℃~105℃
- Terminal Material: Copper
- Brazed Seam
- Plating: Electro Tin Plated
- Insulated Material : Heat Shrinkable Tube

CE RoHS

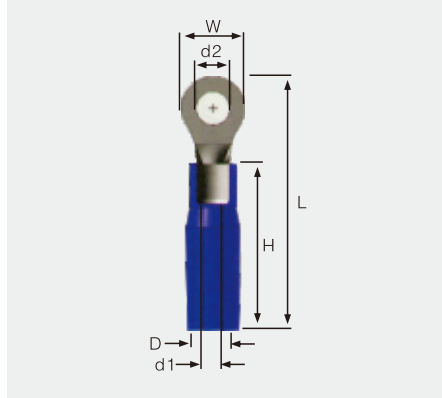


| ITEM NO . | STUD SIZE | | DIMENSION mm | | | | | | | PCS/ PACK | COLOR | EXPLANATION |
|---|---|---|---|---|---|---|---|---|---|---|---|---|
| | Metric | American | d2 | W | L | H | d1 | D | T | | | |
| HRV1.25-4S | 4 | #8 | 4.3 | 6.6 | 26 | 18.5 | 1.7 | 4.5 | 0.8 | 100 | Red | Wire range : 0.5-1.5mm² A. W. G. : (22-16) Max.current=19A |
| HRV1.25-4L | 4 | #8 | 4.3 | 8.0 | | | | | | | | |
| HRV1.25-5 | 5 | #10 | 5.3 | | | | | | | | | |
| HRV1.25-5L | 5 | #10 | 5.3 | 9.5 | | | | | | | | |
| HRV1.25-6 | 6 | 1/ 4 " | 6.5 | 11.6 | 31.5 | | | | | | | |
| HRV1.25-8 | 8 | 5/16 " | 8.5 | | | | | | | | | |
| HRV1.25-10 | 10 | 3/8 " | 10.5 | 13.6 | 40.5 | | | | | | | |
| HRV1.25-12 | 12 | 1 /2 " | 13.0 | 19.2 | 45.5 | | | | | | | |
| HRV2-4S | 4 | #8 | 4.3 | 6.6 | 28.5 | 20.5 | 2.3 | 5.5 | 0.8 | 100 | Blue | Wire range : 1.5-2.5mm² A. W. G. : (16-14) Max.current=27A |
| HRV2-4L | 4 | #8 | 4.3 | 8.5 | | | | | | | | |
| HRV2-5S | 5 | #10 | 5.3 | | | | | | | | | |
| HRV2-5L | 5 | #10 | 5.3 | 9.5 | | | | | | | | |
| HRV2-6 | 6 | 1/ 4 " | 6.5 | 12.0 | 33.5 | | | | | | | |
| HRV2-8 | 8 | 5/16 " | 8.5 | 12.0 | | | | | | | | |
| HRV2-10 | 10 | 3/8 " | 10.5 | 13.6 | 37.2 | | | | | | | |
| HRV2-12 | 12 | 1 /2 " | 13.0 | 19.2 | 40.2 | | | | | | | |
| HRV5.5-4L | 4 | #8 | 4.3 | 9.5 | 33 | 23.5 | 3.4 | 6.5 | 1.0 | 100 | Yellow | Wire range : 4-6mm² A. W. G. : (12-10) Max.current=48A |
| HRV5.5-5 | 5 | #10 | 5.3 | | | | | | | | | |
| HRV5.5-6 | 6 | 1/ 4 " | 6.5 | 12.0 | 36.5 | | | | | | | |
| HRV5.5-8 | 8 | 5/16 " | 8.5 | 15.0 | 41 | | | | | | | |
| HRV5.5-10 | 10 | 3/8 " | 10.5 | | | | | | | | | |
| HRV5.5-12 | 12 | 1 /2 " | 13.0 | 19.2 | 45.5 | | | | | | | |

## Vinyl-Insulated Spade Terminals

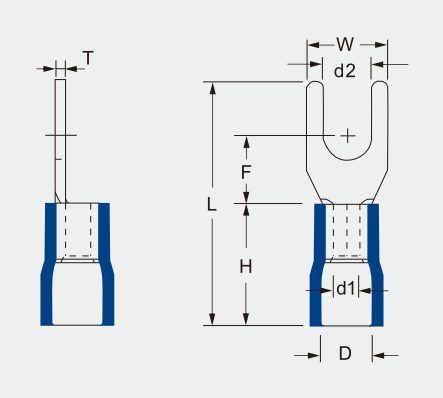


- Maximum electrical rating: 600 volts
- Maximum temperature: 75℃
- Terminals material : copper
- Plating: Tin plated
- Insulation material: vinyl (PVC)

CE SGS RoHS

B

| ITEM NO . | STUD SIZE | | DIMENSION mm | | | | | | | | PCS/ PACK | COLOR | EXPLANATION |
|---|---|---|---|---|---|---|---|---|---|---|---|---|---|
| | Metric | American | d2 | W | F | L | H | d1 | D | T | | | |
| SV1.25-3.2 | 3 | #4 | 3.2 | 5.7 | 6.5 | 21.2 | 10.0 | 1.7 | 4.2 | 0.8 | 100 | Red | Wire range : 0.5-1.5mm² A. W. G. : (22-16) Max.current=19A |
| SV1.25-3.5S | 3.5 | #6 | 3.7 | | | | | | | | | | |
| SV1.25-3.5L | 3.5 | #6 | 3.7 | 6.4 | | | | | | | | | |
| SV1.25-4S | 4 | #8 | 4.3 | 6.4 | | | | | | | | | |
| SV1.25-4M | 4 | #8 | 4.3 | 7.2 | | | | | | | | | |
| SV1.25-4L | 4 | #8 | 4.3 | 8.1 | | | | | | | | | |
| SV1.25-5S | 5 | #10 | 5.3 | | | | | | | | | | |
| SV1.25-5L | 5 | #10 | 5.3 | 9.5 | | | | | | | | | |
| SV1.25-6S | 6 | 1/ 4 " | 6.5 | | | | | | | | | | |
| SV1.25-6L | 6 | 1/ 4 " | 6.5 | 12.0 | 11.0 | 27.2 | | | | | | | |
| SV1.25-8 | 8 | 5/16 " | 8.5 | 13.5 | 11.5 | 26.7 | | | | | | | |
| SV2-3.2 | 3 | #4 | 3.2 | 5.7 | 6.5 | 21.2 | 10.0 | 2.3 | 4.7 | 0.8 | 100 | Blue | Wire range : 1.5-2.5mm² A. W. G. : (16-14) Max.current=27A |
| SV2-3.5S | 3.5 | #6 | 3.7 | | | | | | | | | | |
| SV2-3.5L | 3.5 | #6 | 3.7 | 6.0 | | | | | | | | | |
| SV2-4S | 4 | #8 | 4.3 | 6.4 | | | | | | | | | |
| SV2-4M | 4 | #8 | 4.3 | 7.2 | | | | | | | | | |
| SV2-4L | 4 | #8 | 4.3 | 8.1 | | | | | | | | | |
| SV2-5S | 5 | #10 | 5.3 | | | | | | | | | | |
| SV2-5L | 5 | #10 | 5.3 | 9.5 | | | | | | | | | |
| SV2-6S | 6 | 1/ 4 " | 6.5 | | | | | | | | | | |
| SV2-6L | 6 | 1/ 4 " | 6.5 | 12.0 | 11.0 | 27.2 | | | | | | | |
| SV2-8 | 8 | 5/ 16 " | 8.5 | 13.5 | 11.5 | 27.0 | | | | | | | |
| SV3.5-3.5 | 3.5 | #6 | 3.7 | 8.0 | 7.7 | 25.3 | 13.0 | 2.9 | 6.2 | 1.0 | 100 | Black | Wire range : 2.5-4mm² A. W. G. : (14-12) Max.current=37A |
| SV3.5-4 | 4.0 | #8 | 4.3 | | | | | | | | | | |
| SV3.5-5 | 5.0 | #10 | 5.3 | | | | | | | | | | |
| SV3.5-6 | 6.0 | 1/ 4 " | 6.5 | 12.0 | 9.1 | 28.5 | | | | | | | |
| SV3.5-8 | 8 | 5/16 " | 8.5 | 14 | 11.5 | 30.7 | | | | | | | |

B

## Vinyl-Insulated Spade Terminals

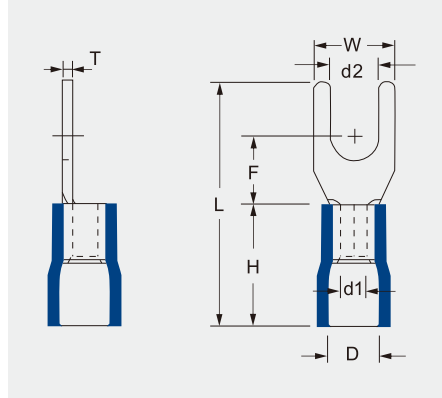


- Maximum electrical rating: 600 volts
- Maximum temperature: 75℃
- Terminals material : copper
- Plating:Tin plated
- Insulation material: vinyl (PVC)

CE SGS RoHS

| ITEM NO . | STUD SIZE | | DIMENSION mm | | | | | | | | PCS/ PACK | COLOR | EXPLANATION |
|---|---|---|---|---|---|---|---|---|---|---|---|---|---|
| | Metric | American | d2 | W | F | L | H | d1 | D | T | | | |
| SV5.5-3.5 | 3.5 | #6 | 3.7 | 8.3 | 7.0 | 25.5 | 13.0 | 3.4 | 6.5 | 1.0 | 100 | Yellow | Wire range : 4-6mm² A. W. G. : (12-10) Max.current=48A |
| SV5.5-4S | 4 | #8 | 4.3 | 8.3 | 7.0 | 25.5 | | | | | | | |
| SV5.5-4L | 4 | #8 | 4.3 | 9.0 | | | | | | | | | |
| SV5.5-5 | 5 | #10 | 5.3 | | | | | | | | | | |
| SV5.5-6S | 6 | 1/ 4 " | 6.5 | | | | | | | | | | |
| SV5.5-6L | 6 | 1/ 4 " | 6.5 | 12.0 | 12.0 | 31.7 | | | | | | | |
| SV5.5-8 | 8 | 5/16 " | 8.5 | 14.0 | 11.5 | 30.7 | | | | | | | |
| SV8-4 | 4 | #8 | 4.3 | 9.0 | 7.6 | 28.3 | 16.0 | 4.5 | 8.0 | 1.2 | 100 | Red | Wire range : 6-10mm² A. W. G. : (8) Max.current=62A |
| SV8-5 | 5 | #10 | 5.3 | 9.0 | 8.1 | | | | | | | | |
| SV8-6 | 6 | 1/ 4 " | 6.5 | 12.0 | 9.2 | 31.3 | | | | | | | |
| SV8-8 | 8 | 5/16 " | 8.5 | 13.8 | 10.7 | 32.9 | | | | | | | |
| SV8-10 | 10 | 3/8 " | 10.5 | 15.9 | | | | | | | | | |
| SV14-4 | 4 | #8 | 4.3 | 9.0 | 9.5 | 36.5 | 21.5 | 5.8 | 11.0 | 1.4 | 50 | Blue | Wire range : 10-16mm² A. W. G. : (6) Max.current=10-16A |
| SV14-5 | 5 | #10 | 5.3 | | | | | | | | | | |
| SV14-6 | 6 | 1/ 4 " | 6.5 | 11.0 | | | | | | | | | |
| SV14-8 | 8 | 5/16 " | 8.5 | 13.8 | 10.7 | 39.5 | | | | | | | |
| SV14-10 | 10 | 3/8 " | 10.5 | 15.9 | | | | | | | | | |
| SV22-5 | 5 | #10 | 5.3 | 11.0 | 9.5 | 39.3 | 23.5 | 7.7 | 13.0 | 1.6 | 50 | Yellow | Wire range : 16-25mm² A. W. G. : (4) Max.current=16-25A |
| SV22-6 | 6 | 1/4 " | 6.5 | | | | | | | | | | |
| SV22-8 | 8 | 5/16 " | 8.5 | 16.5 | 13.5 | 45.0 | | | | | | | |

## Vinyl-Insulated Spade Terminals
## Easy Entry

- Maximum electrical rating: 600 volts
- Maximum temperature: 75℃
- Terminals material : copper
- Plating: Tin plated
- Insulation material: easy entry vinyl

CE SGS RoHS

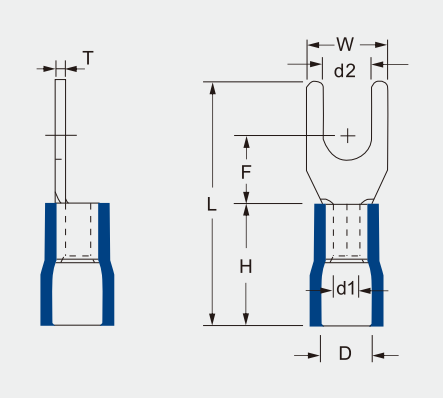


B

| ITEM NO . | STUD SIZE | | DIMENSION mm | | | | | | | | PCS/ PACK | COLOR | EXPLANATION |
|---|---|---|---|---|---|---|---|---|---|---|---|---|---|
| | Metric | American | d2 | W | F | L | H | d1 | D | T | | | |
| ESV1.25-3.2 | 3 | #4 | 3.2 | 5.7 | 6.5 | 21.2 | 10.0 | 1.7 | 4.2 | 0.8 | 100 | Red | Wire range : 0.5-1.5mm² A. W. G. : (22-16) Max.current=19A |
| ESV1.25-3.5S | 3.5 | #6 | 3.7 | | | | | | | | | | |
| ESV1.25-3.5L | 3.5 | #6 | 3.7 | 6.4 | | | | | | | | | |
| ESV1.25-4S | 4 | #8 | 4.3 | 6.4 | | | | | | | | | |
| ESV1.25-4M | 4 | #8 | 4.3 | 7.2 | | | | | | | | | |
| ESV1.25-4L | 4 | #8 | 4.3 | 8.1 | | | | | | | | | |
| ESV1.25-5S | 5 | #10 | 5.3 | | | | | | | | | | |
| ESV1.25-5L | 5 | #10 | 5.3 | 9.5 | | | | | | | | | |
| ESV1.25-6S | 6 | 1/ 4 " | 6.5 | | | | | | | | | | |
| ESV1.25-6L | 6 | 1/ 4 " | 6.5 | 12.0 | 11.0 | 27.2 | | | | | | | |
| ESV1.25-8 | 8 | 5/16 " | 8.5 | 13.5 | 11.5 | 26.7 | | | | | | | |
| ESV2-3.2 | 3 | #4 | 3.2 | 5.7 | 6.5 | 21.2 | 10.0 | 2.3 | 4.7 | 0.8 | 100 | Blue | Wire range : 1.5-2.5mm² A. W. G. : (16-14) Max.current=27A |
| ESV2-3.5S | 3.5 | #6 | 3.7 | | | | | | | | | | |
| ESV2-3.5L | 3.5 | #6 | 3.7 | 6.0 | | | | | | | | | |
| ESV2-4S | 4 | #8 | 4.3 | 6.4 | | | | | | | | | |
| ESV2-4M | 4 | #8 | 4.3 | 7.2 | | | | | | | | | |
| ESV2-4L | 4 | #8 | 4.3 | 8.1 | | | | | | | | | |
| ESV2-5S | 5 | #10 | 5.3 | | | | | | | | | | |
| ESV2-5L | 5 | #10 | 5.3 | 9.5 | | | | | | | | | |
| ESV2-6S | 6 | 1/ 4 " | 6.5 | | | | | | | | | | |
| ESV2-6L | 6 | 1/ 4 " | 6.5 | 12.0 | 11.0 | 27.2 | | | | | | | |
| ESV2-8 | 8 | 5/ 16 " | 8.5 | 13.5 | 11.5 | 27.0 | | | | | | | |
| ESV5.5-3.5 | 3.5 | #6 | 3.7 | 8.3 | 7.0 | 25.5 | 13.0 | 3.4 | 6.5 | 1.0 | 100 | Yellow | Wire range : 4-6mm² A. W. G. : (12-10) Max.current=48A |
| ESV5.5-4S | 4 | #8 | 4.3 | 8.3 | 7.0 | 25.5 | | | | | | | |
| ESV5.5-4L | 4 | #8 | 4.3 | 9.0 | | | | | | | | | |
| ESV5.5-5 | 5 | #10 | 5.3 | | | | | | | | | | |
| ESV5.5-6S | 6 | 1/ 4 " | 6.5 | | | | | | | | | | |
| ESV5.5-6L | 6 | 1/ 4 " | 6.5 | 12.0 | 12.0 | 31.7 | | | | | | | |
| ESV5.5-8 | 8 | 5/16 " | 8.5 | 14.0 | 11.5 | 30.7 | | | | | | | |

B

## Vinyl-Insulated Spade Terminals
## Double Crimp

- Maximum electrical rating: 600 volts
- Maximum temperature: 75℃
- Terminals material : copper
- Plating: Tin plated
- Insulation material: vinyl (PVC)
- Double crimp: with copper sleeve on barrel

CE SGS RoHS

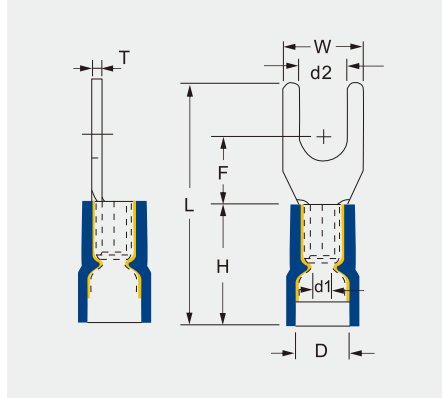


| ITEM NO . | STUD SIZE | | DIMENSION mm | | | | | | | | PCS/ PACK | COLOR | EXPLANATION |
|---|---|---|---|---|---|---|---|---|---|---|---|---|---|
| | Metric | American | d2 | W | F | L | H | d1 | D | T | | | |
| SV1.25-3.2D | 3 | #4 | 3.2 | 5.7 | 6.5 | 21.2 | 10.0 | 1.7 | 4.5 | 0.8 | 100 | Red | Wire range : 0.5-1.5mm² A. W. G. : (22-16) Max.current=19A |
| SV1.25-3.5SD | 3.5 | #6 | 3.7 | | | | | | | | | | |
| SV1.25-3.5LD | 3.5 | #6 | 3.7 | 6.4 | | | | | | | | | |
| SV1.25-4SD | 4 | #8 | 4.3 | 6.4 | | | | | | | | | |
| SV1.25-4MD | 4 | #8 | 4.3 | 7.2 | | | | | | | | | |
| SV1.25-5SD | 5 | #10 | 5.3 | 8.1 | | | | | | | | | |
| SV1.25-5LD | 5 | #10 | 5.3 | 9.5 | | | | | | | | | |
| SV1.25-6SD | 6 | 1/ 4 " | 6.5 | | | | | | | | | | |
| SV1.25-6LD | 6 | 1/ 4 " | 6.5 | 12.0 | 11.0 | 27.2 | | | | | | | |
| SV1.25-8D | 8 | 5/16 " | 8.5 | 13.5 | 11.5 | 26.7 | | | | | | | |
| SV2-3.2D | 3 | #4 | 3.2 | 5.7 | 6.5 | 21.2 | 10.0 | 2.3 | 5.0 | 0.8 | 100 | Blue | Wire range : 1.5-2.5mm² A. W. G. : (16-14) Max.current=27A |
| SV2-3.5SD | 3.5 | #6 | 3.7 | | | | | | | | | | |
| SV2-3.5LD | 3.5 | #6 | 3.7 | 6.0 | | | | | | | | | |
| SV2-4SD | 4 | #8 | 4.3 | 6.4 | | | | | | | | | |
| SV2-4MD | 4 | #8 | 4.3 | 7.2 | | | | | | | | | |
| SV2-5SD | 5 | #10 | 5.3 | 8.1 | | | | | | | | | |
| SV2-5LD | 5 | #10 | 5.3 | 9.5 | | | | | | | | | |
| SV2-6SD | 6 | 1/ 4 " | 6.5 | | | | | | | | | | |
| SV2-6LD | 6 | 1/ 4 " | 6.5 | 12.0 | 11.0 | 27.2 | | | | | | | |
| SV2-8D | 8 | 5/ 16 " | 8.5 | 13.5 | 11.5 | 27.0 | | | | | | | |
| SV5.5-3.5D | 3.5 | #6 | 3.7 | 8.3 | 8.3 | 25.5 | 13.0 | 3.4 | 6.7 | 1.0 | 100 | Yellow | Wire range : 4-6mm² A. W. G. : (12-10) Max.current=48A |
| SV5.5-4SD | 4 | #8 | 4.3 | 8.3 | 7.0 | 25.5 | | | | | | | |
| SV5.5-4LD | 4 | #8 | 4.3 | 9.0 | | | | | | | | | |
| SV5.5-5D | 5 | #10 | 5.3 | | | | | | | | | | |
| SV5.5-6SD | 6 | 1/ 4 " | 6.5 | | | | | | | | | | |
| SV5.5-6LD | 6 | 1/ 4 " | 6.5 | 12.0 | 12.0 | 31.7 | | | | | | | |
| SV5.5-8D | 8 | 5/16 " | 8.5 | 14.0 | 11.5 | 30.7 | | | | | | | |

## Nylon-Insulated Spade Terminals

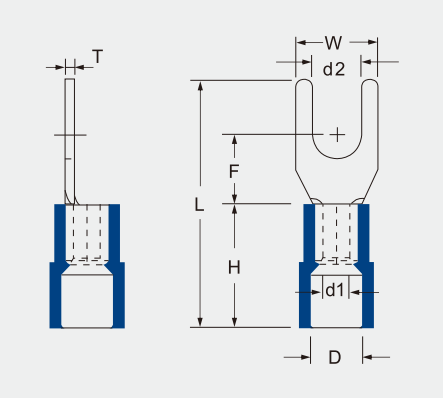


- Maximum electrical rating: 600 volts
- Maximum temperature: 105℃
- Terminals material : copper
- Plating: Tin plated
- Insulation material: easy entry nylon

CE SGS RoHS

B

| ITEM NO . | STUD SIZE | | DIMENSION mm | | | | | | | | PCS/ PACK | COLOR | EXPLANATION |
|---|---|---|---|---|---|---|---|---|---|---|---|---|---|
| | Metric | American | d2 | W | F | L | H | d1 | D | T | | | |
| SNY1.25-3.2 | 3 | #4 | 3.2 | 5.7 | 6.5 | 22.2 | 11.0 | 1.7 | 4.3 | 0.8 | 100 | Red | Wire range : 0.5-1.5mm² A. W. G. : (22-16) Max.current=19A |
| SNY1.25-3.5S | 3.5 | #6 | 3.7 | | | | | | | | | | |
| SNY1.25-3.5L | 3.5 | #6 | 3.7 | 6.4 | | | | | | | | | |
| SNY1.25-4S | 4 | #8 | 4.3 | 6.4 | | | | | | | | | |
| SNY1.25-4M | 4 | #8 | 4.3 | 7.2 | | | | | | | | | |
| SNY1.25-4L | 4 | #8 | 4.3 | 8.1 | | | | | | | | | |
| SNY1.25-5S | 5 | #10 | 5.3 | | | | | | | | | | |
| SNY1.25-5L | 5 | #10 | 5.3 | 9.5 | | | | | | | | | |
| SNY1.25-6S | 6 | 1/ 4 " | 6.5 | | | | | | | | | | |
| SNY1.25-6L | 6 | 1/ 4 " | 6.5 | 12.0 | 11.0 | 28.2 | | | | | | | |
| SNY1.25-8 | 8 | 5/ 16 " | 8.5 | 13.5 | 11.5 | 28.0 | | | | | | | |
| SNY2-3.2 | 3 | #4 | 3.2 | 5.7 | 6.5 | 22.2 | 11.0 | 2.3 | 4.8 | 0.8 | 100 | Blue | Wire range : 1.5-2.5mm² A. W. G. : (16-14) Max.current=27A |
| SNY2-3.5S | 3.5 | #6 | 3.7 | | | | | | | | | | |
| SNY2-3.5L | 3.5 | #6 | 3.7 | 6.0 | | | | | | | | | |
| SNY2-4S | 4 | #8 | 4.3 | 6.4 | | | | | | | | | |
| SNY2-4M | 4 | #8 | 4.3 | 7.2 | | | | | | | | | |
| SNY2-4L | 4 | #8 | 4.3 | 8.1 | | | | | | | | | |
| SNY2-5S | 5 | #10 | 5.3 | | | | | | | | | | |
| SNY2-5L | 5 | #10 | 5.3 | 9.5 | | | | | | | | | |
| SNY2-6S | 6 | 1/ 4 " | 6.5 | | | | | | | | | | |
| SNY2-6L | 6 | 1/ 4 " | 6.5 | 12.0 | 11.0 | 28.2 | | | | | | | |
| SNY2-8 | 8 | 5/ 16 " | 8.5 | 13.5 | 11.5 | 28.0 | | | | | | | |

B

## Nylon-Insulated Spade Terminals

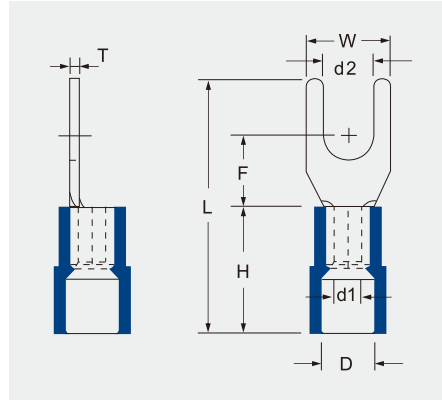


- Maximum electrical rating: 600 volts
- Maximum temperature: 105℃
- Terminals material : copper
- Plating: Tin plated
- Insulation material: easy entry nylon

CE SGS RoHS

| ITEM NO . | STUD SIZE | | DIMENSION mm | | | | | | | | PCS/ PACK | COLOR | EXPLANATION |
|---|---|---|---|---|---|---|---|---|---|---|---|---|---|
| | Metric | American | d2 | W | F | L | H | d1 | D | T | | | |
| SNY5.5-3.5 | 3.5 | #6 | 3.7 | 8.3 | 7.0 | 25.5 | 13.0 | 3.4 | 6.7 | 1.0 | 100 | Yellow | Wire range : 4-6mm² A. W. G. : (12-10) Max.current=48A |
| SNY5.5-4S | 4 | #8 | 4.3 | 8.3 | 7.0 | 25.5 | | | | | | | |
| SNY5.5-4L | 4 | #8 | 4.3 | 9.0 | 7.0 | 25.5 | | | | | | | |
| SNY5.5-5 | 5 | #10 | 5.3 | | | | | | | | | | |
| SNY5.5-6S | 6 | 1/ 4 " | 6.5 | | | | | | | | | | |
| SNY5.5-6L | 6 | 1/ 4 " | 6.5 | 12.0 | 12.0 | 31.7 | | | | | | | |
| SNY5.5-8 | 8 | 5/16 " | 8.5 | 14.0 | 11.5 | 30.7 | | | | | | | |
| SNY8-4 | 4 | #8 | 4.3 | 9.0 | 7.6 | 28.3 | 16.0 | 4.5 | 8.0 | 1.2 | 100 | Red | Wire range : 6-10mm² A. W. G. : (8) Max.current=62A |
| SNY8-5 | 5 | #10 | 5.3 | 9.0 | 8.1 | | | | | | | | |
| SNY8-6 | 6 | 1/ 4 " | 6.5 | 12.0 | 9.2 | 31.3 | | | | | | | |
| SNY8-8 | 8 | 5/16 " | 8.5 | 13.8 | 10.7 | 32.9 | | | | | | | |
| SNY8-10 | 10 | 3/8 " | 10.5 | 15.9 | | | | | | | | | |
| SNY14-4 | 4 | #8 | 4.3 | 9.0 | 9.5 | 36.5 | 21.5 | 5.8 | 11.0 | 1.4 | 50 | Blue | Wire range : 10-16mm² A. W. G. : (6) Max.current=10-16A |
| SNY14-5 | 5 | #10 | 5.3 | | | | | | | | | | |
| SNY14-6 | 6 | 1/ 4 " | 6.5 | 11.0 | | | | | | | | | |
| SNY14-8 | 8 | 5/16 " | 8.5 | 13.8 | 10.7 | 39.5 | | | | | | | |
| SNY14-10 | 10 | 3/8 " | 10.5 | 15.9 | | | | | | | | | |
| SNY22-5 | 5 | #10 | 5.3 | 11.0 | 9.5 | 39.3 | 23.5 | 7.7 | 13.0 | 1.6 | 50 | Yellow | Wire range : 16-25mm² A. W. G. : (4) Max.current=16-25A |
| SNY22-6 | 6 | 1/4 " | 6.5 | | | | | | | | | | |
| SNY22-8 | 8 | 5/16 " | 8.5 | 16.5 | 13.5 | 45.0 | | | | | | | |

## Nylon-Insulated Spade Terminals
## Double Crimp

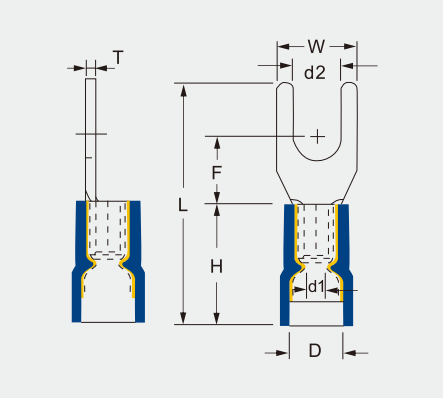


- Maximum electrical rating: 600 volts
- Maximum temperature: 105℃
- Terminals material : copper
- Plating: Tin plated
- Insulation material: easy entry nylon

CE SGS RoHS

B

| ITEM NO. | STUD SIZE | | DIMENSION mm | | | | | | | | PCS/ PACK | COLOR | EXPLANATION |
|---|---|---|---|---|---|---|---|---|---|---|---|---|---|
| | Metric | American | d2 | W | F | L | H | d1 | D | T | | | |
| SNY1.25-3.2D | 3 | #4 | 3.2 | 5.7 | 6.5 | 22.2 | 11.0 | 1.7 | 4.3 | 0.8 | 100 | Red | Wire range : 0.5-1.5mm² A. W. G. : (22-16) Max.current=19A |
| SNY1.25-3.5SD | 3.5 | #6 | 3.7 | | | | | | | | | | |
| SNY1.25-3.5LD | 3.5 | #6 | 3.7 | 6.4 | | | | | | | | | |
| SNY1.25-4SD | 4 | #8 | 4.3 | 6.4 | | | | | | | | | |
| SNY1.25-4MD | 4 | #8 | 4.3 | 7.2 | | | | | | | | | |
| SNY1.25-4LD | 4 | #8 | 4.3 | 8.1 | | | | | | | | | |
| SNY1.25-5SD | 5 | #10 | 5.3 | | | | | | | | | | |
| SNY1.25-5LD | 5 | #10 | 5.3 | 9.5 | | | | | | | | | |
| SNY1.25-6SD | 6 | 1/ 4 " | 6.5 | | | | | | | | | | |
| SNY1.25-6LD | 6 | 1/ 4 " | 6.5 | 12.0 | 11.0 | 28.2 | | | | | | | |
| SNY1.25-8D | 8 | 5/ 16 " | 8.5 | 13.5 | 11.5 | 28.0 | | | | | | | |
| SNY2-3.2D | 3 | #4 | 3.2 | 5.7 | 6.5 | 22.2 | 11.0 | 2.3 | 4.8 | 0.8 | 100 | Blue | Wire range : 1.5-2.5mm² A. W. G. : (16-14) Max.current=27A |
| SNY2-3.5SD | 3.5 | #6 | 3.7 | | | | | | | | | | |
| SNY2-3.5LD | 3.5 | #6 | 3.7 | 6.0 | | | | | | | | | |
| SNY2-4SD | 4 | #8 | 4.3 | 6.4 | | | | | | | | | |
| SNY2-4MD | 4 | #8 | 4.3 | 7.2 | | | | | | | | | |
| SNY2-4LD | 4 | #8 | 4.3 | 8.1 | | | | | | | | | |
| SNY2-5SD | 5 | #10 | 5.3 | | | | | | | | | | |
| SNY2-5LD | 5 | #10 | 5.3 | 9.5 | | | | | | | | | |
| SNY2-6SD | 6 | 1/ 4 " | 6.5 | | | | | | | | | | |
| SNY2-6LD | 6 | 1/ 4 " | 6.5 | 12.0 | 11.0 | 28.2 | | | | | | | |
| SNY2-8D | 8 | 5/ 16 " | 8.5 | 13.5 | 11.5 | 28.0 | | | | | | | |
| SNY5.5-3.5D | 3.5 | #6 | 3.7 | 8.3 | 7.0 | 25.5 | 13.0 | 3.4 | 6.7 | 1.0 | 100 | Yellow | Wire range : 4-6mm² A. W. G. : (12-10) Max.current=48A |
| SNY5.5-4SD | 4 | #8 | 4.3 | 8.3 | 7.0 | 25.5 | | | | | | | |
| SNY5.5-4LD | 4 | #8 | 4.3 | 9.0 | 7.0 | 25.5 | | | | | | | |
| SNY5.5-5D | 5 | #10 | 5.3 | | | | | | | | | | |
| SNY5.5-6SD | 6 | 1/ 4 " | 6.5 | | | | | | | | | | |
| SNY5.5-6LD | 6 | 1/ 4 " | 6.5 | 12.0 | 12.0 | 31.7 | | | | | | | |
| SNY5.5-8D | 8 | 5/16 " | 8.5 | 14.0 | 11.5 | 30.7 | | | | | | | |

B

## Insulated Heat Shrinkable Spade Terminals

- Maximum Electrical Rating : 600 Volts
- Shrink Temp 150 ℃
  Operating Temp −10℃~105℃
- Terminal Material: Copper
- Brazed Seam
- Plating: Electro Tin Plated
- Insulated Material : Heat Shrinkable Tube

CE RoHS

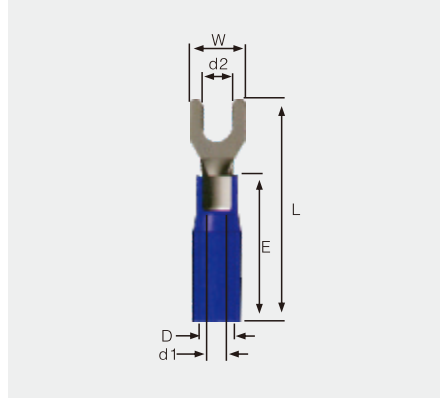


| ITEM NO . | STUD SIZE | | DIMENSION mm | | | | | | | PCS/ PACK | COLOR | EXPLANATION |
|---|---|---|---|---|---|---|---|---|---|---|---|---|
| | Metric | American | d2 | W | L | H | d1 | D | T | | | |
| S1-5SBH | 5 | #10 | 5.3 | 8.1 | 25.5 | 18.5 | 1.7 | 4.5 | 0.8 | 100 | Red | Wire range : 0.5-1.5mm² A. W. G. : (22-16) Max.current=19A |
| S1-6SBH | 6 | 1/4 " | 6.5 | 9.5 | 29.5 | 18.5 | 1.7 | 4.5 | 0.8 | | | |
| S2-4LBH | 4 | #8 | 4.3 | 8.1 | 27.5 | 20.5 | 2.3 | 5.5 | 0.8 | | Blue | Wire range : 1.5-2.5mm² A. W. G. : (16-14) Max.current=27A |
| S2-5LBH | 5 | #10 | 5.3 | 9.5 | 28.5 | 20.5 | 2.3 | 5.5 | 0.8 | | | |
| S5-4LBH | 4 | #8 | 4.3 | 9.0 | 32.5 | 23.5 | 3.4 | 6.5 | 1.0 | | Yellow | Wire range : 4-6mm² A. W. G. : (12-10) Max.current=48A |
| S5-5BH | 5 | #10 | 5.3 | 9.0 | 32.5 | 23.5 | 3.4 | 6.5 | 1.0 | | | |
| S5-6LBH | 6 | 1/4 " | 6.5 | 9.0 | 32.5 | 23.5 | 3.4 | 6.5 | 1.0 | | | |

## Vinyl-Insulated Flange Spade Terminals

- Maximum electrical rating: 600 volts
- Maximum temperature: 75℃
- Terminals material : copper
- Plating: Tin plated
- Insulation material: vinyl (PVC)

CE RoHS

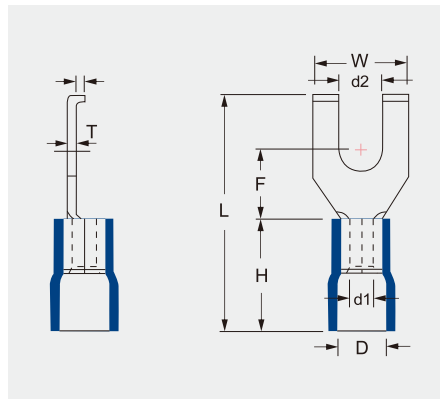


| ITEM NO . | STUD SIZE | | DIMENSION mm | | | | | | | | PCS/ PACK | COLOR | EXPLANATION |
|---|---|---|---|---|---|---|---|---|---|---|---|---|---|
| | Metric | American | d2 | W | F | L | H | d1 | D | T | | | |
| FSV1.25-4 | 4 | #8 | 4.3 | 7.5 | 5.1 | 19.5 | 10.0 | 1.7 | 4.2 | 0.8 | 100 | Red | Wire range : 0.5-1.5mm² A. W. G. : (22-16) Max.current=19A |
| FSV1.25-5 | 5 | #10 | 5.3 | | | | | | | | | | |
| FSV2-4 | 4 | #8 | 4.3 | 7.5 | 5.2 | 20.2 | 10.0 | 2.3 | 4.7 | 0.8 | 100 | Blue | Wire range : 1.5-2.5mm² A. W. G. : (16-14) Max.current=27A |
| FSV2-5 | 5 | #10 | 5.3 | | | | | | | | | | |
| FSV5.5-4 | 4 | #8 | 4.3 | 8.5 | 7.5 | 27.0 | 13.0 | 3.4 | 6.5 | 1.0 | 100 | Yellow | Wire range : 4-6mm² A. W. G. : (12-10) Max.current=48A |
| FSV5.5-5 | 5 | #10 | 5.3 | | | | | | | | | | |

B

## Vinyl-Insulated Locking Spade Terminals

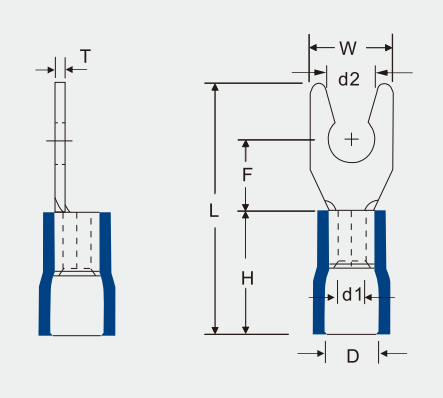


- Maximum electrical rating: 600 volts
- Maximum temperature: 75℃
- Terminals material : copper
- Plating: Tin plated
- Insulation material: vinyl (PVC)

CE SGS RoHS

| ITEM NO . | STUD SIZE | | DIMENSION mm | | | | | | | | PCS/ PACK | COLOR | EXPLANATION |
|---|---|---|---|---|---|---|---|---|---|---|---|---|---|
| | Metric | American | d2 | W | F | L | H | d1 | D | T | | | |
| LSV1.25-4 | 4 | #8 | 4.3 | 7.2 | 6.5 | 21.2 | 10.0 | 1.7 | 4.2 | 0.8 | 100 | Red | Wire range : 0.5-1.5mm² A. W. G. : (22-16) Max.current=19A |
| LSV1.25-5S | 5 | #10 | 5.3 | 8.1 | | | | | | | | | |
| LSV2-4 | 4 | #8 | 4.3 | 7.2 | 6.5 | 21.2 | 10.0 | 2.3 | 4.7 | 0.8 | 100 | Blue | Wire range : 1.5-2.5mm² A. W. G. : (16-14) Max.current=27A |
| LSV2-5S | 5 | #10 | 5.3 | 8.1 | | | | | | | | | |
| LSV5.5-4 | 4 | #8 | 4.3 | 8.3 | 7.0 | 25.5 | 13.0 | 3.4 | 6.5 | 1.0 | 100 | Yellow | Wire range : 4-6mm² A. W. G. : (12-10) Max.current=48A |
| LSV5.5-5 | 5 | #10 | 5.3 | 9.0 | | | | | | | | | |
| LSV5.5-6 | 6 | 1/ 4 " | 6.5 | 12.0 | 12.0 | 31.7 | | | | | | | |

## Nylon-Insulated Locking Spade Terminals

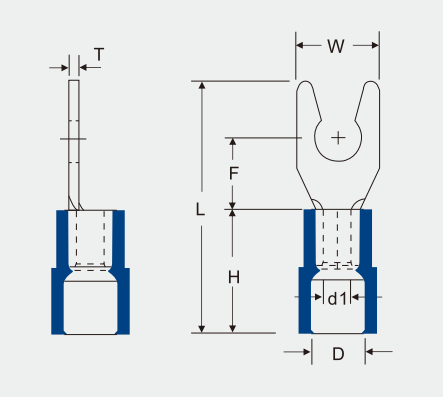


- Maximum electrical rating: 600 volts
- Maximum temperature: 105℃
- Terminals material : copper
- Plating: Tin plated
- Insulation material: easy entry nylon

CE SGS RoHS

| ITEM NO . | STUD SIZE | | DIMENSION mm | | | | | | | | PCS/ PACK | COLOR | EXPLANATION |
|---|---|---|---|---|---|---|---|---|---|---|---|---|---|
| | Metric | American | d2 | W | F | L | H | d1 | D | T | | | |
| LSNY1.25-4S | 4 | #8 | 4.3 | 7.5 | 6.5 | 22.2 | 11.0 | 1.7 | 4.3 | 0.8 | 100 | Red | Wire range : 0.5-1.5mm² A. W. G. : (22-16) Max.current=19A |
| LSNY1.25-5S | 5 | #10 | 5.3 | 8.1 | | | | | | | | | |
| LSNY2-4 | 4 | #8 | 4.3 | 7.2 | 6.5 | 22.2 | 11.0 | 2.3 | 4.8 | 0.8 | 100 | Blue | Wire range : 1.5-2.5mm² A. W. G. : (16-14) Max.current=27A |
| LSNY2-5S | 5 | #10 | 5.3 | 8.1 | | | | | | | | | |
| LSNY5.5-4 | 4 | #8 | 4.3 | 8.3 | 7.0 | 25.5 | 13.0 | 3.4 | 6.7 | 1.0 | 100 | Yellow | Wire range : 4-6mm² A. W. G. : (12-10) Max.current=48A |
| LSNY5.5-5 | 5 | #10 | 5.3 | 9.0 | | | | | | | | | |
| LSNY5.5-6 | 6 | 1/ 4 " | 6.5 | 12.0 | 12.0 | 31.7 | | | | | | | |

B

## Vinyl-Insulated Hook Terminals

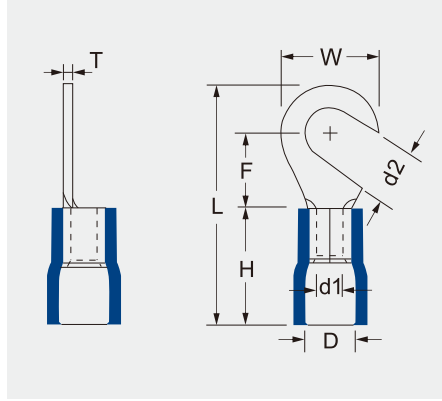


- Maximum electrical rating: 600 volts
- Maximum temperature: 75℃
- Terminals material : copper
- Plating: Tin plated
- Insulation material: vinyl (PVC)

CE RoHS

| ITEM NO . | STUD SIZE | | DIMENSION mm | | | | | | | | PCS/ PACK | COLOR | EXPLANATION |
|---|---|---|---|---|---|---|---|---|---|---|---|---|---|
| | Metric | American | d2 | W | F | L | H | d1 | D | T | | | |
| HV1.25-4 | 4 | #8 | 4.3 | 8.0 | 7.0 | 21.0 | 10.0 | 1.7 | 4.2 | 0.8 | 100 | Red | Wire range : 0.5-1.5mm² A. W. G. : (22-16) Max.current=19A |
| HV1.25-5 | 5 | #10 | 5.3 | | | | | | | | | | |
| HV1.25-6 | 6 | 1/ 4 " | 6.5 | 11.6 | 11.2 | 27.0 | | | | | | | |
| HV2-4 | 4 | #8 | 4.3 | 8.5 | 7.75 | 22.0 | 10.0 | 2.3 | 4.7 | 0.8 | 100 | Blue | Wire range : 1.5-2.5mm² A. W. G. : (16-14) Max.current=27A |
| HV2-5 | 5 | #10 | 5.3 | 9.5 | 7.5 | 22.3 | | | | | | | |
| HV2-6 | 6 | 1/ 4 " | 6.5 | 12.0 | 11.0 | 27.0 | | | | | | | |
| HV5.5-4 | 4 | #8 | 4.3 | 9.5 | 8.85 | 26.6 | 13.0 | 3.4 | 6.5 | 1.0 | 100 | Yellow | Wire range : 4-6mm² A. W. G. : (12-10) Max.current=48A |
| HV5.5-5 | 5 | #10 | 5.3 | | | | | | | | | | |
| HV5.5-6 | 6 | 1/ 4 " | 6.5 | 12.0 | 10.5 | 29.5 | | | | | | | |

## Nylon-Insulated Hook Terminals

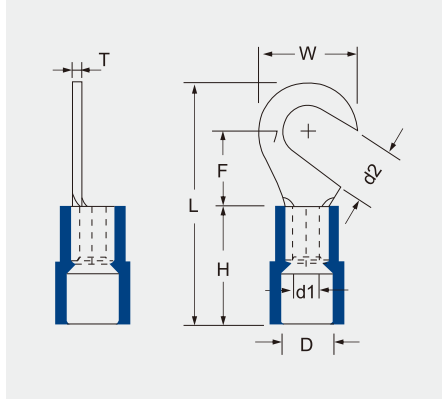


- Maximum electrical rating: 600 volts
- Maximum temperature: 105℃
- Terminals material : copper
- Plating: Tin plated
- Insulation material: easy entry nylon

CE RoHS

| ITEM NO . | STUD SIZE | | DIMENSION mm | | | | | | | | PCS/ PACK | COLOR | EXPLANATION |
|---|---|---|---|---|---|---|---|---|---|---|---|---|---|
| | Metric | American | d2 | W | F | L | H | d1 | D | T | | | |
| HNY1.25-4 | 4 | #8 | 4.3 | 8.0 | 7.0 | 22.0 | 11.0 | 1.7 | 4.3 | 0.8 | 100 | Red | Wire range : 0.5-1.5mm² A. W. G. : (22-16) Max.current=19A |
| HNY1.25-5 | 5 | #10 | 5.3 | | | | | | | | | | |
| HNY1.25-6 | 6 | 1/ 4 " | 6.5 | 11.6 | 11.2 | 28.0 | | | | | | | |
| HNY2-4 | 4 | #8 | 4.3 | 8.5 | 7.75 | 23.0 | 11.0 | 2.3 | 4.8 | 0.8 | 100 | Blue | Wire range : 1.5-2.5mm² A. W. G. : (16-14) Max.current=27A |
| HNY2-5 | 5 | #10 | 5.3 | 9.5 | 7.5 | 23.3 | | | | | | | |
| HNY2-6 | 6 | 1/ 4 " | 6.5 | 12.0 | 11.0 | 28.0 | | | | | | | |
| HNY5.5-4 | 4 | #8 | 4.3 | 9.5 | 8.85 | 26.6 | 13.0 | 3.4 | 6.7 | 1.0 | 100 | Yellow | Wire range : 4-6mm² A. W. G. : (12-10) Max.current=48A |
| HNY5.5-5 | 5 | #10 | 5.3 | | | | | | | | | | |
| HNY5.5-6 | 6 | 1/ 4 " | 6.5 | 12.0 | 10.5 | 29.5 | | | | | | | |

B

## Vinyl-Insulated Lipped Blade Terminals

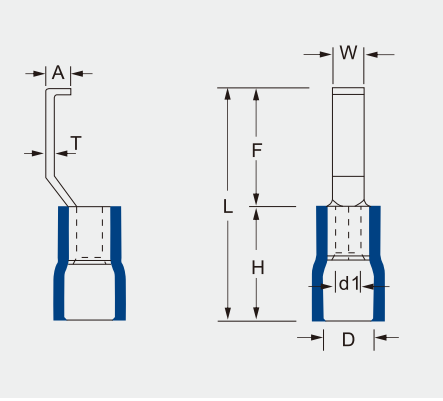


- Maximum electrical rating: 600 volts
- Maximum temperature: 75℃
- Terminals material : copper
- Plating: Tin plated
- Insulation material: vinyl (PVC)

CE RoHS

| ITEM NO . | DIMENSION mm | | | | | | | | PCS/ PACK | COLOR | EXPLANATION |
|---|---|---|---|---|---|---|---|---|---|---|---|
| | W | F | L | H | d1 | D | T | A | | | |
| LBV1.25-4.6 | 4.6 | 17.8 | 27.8 | 10.0 | 1.7 | 4.3 | 0.8 | 2.1 | 100 | Red | Wire range : 0.5-1.5mm$^2$<br>A. W. G. : (22-16)<br>Max.current=19A |
| LBV2-4.6 | 4.6 | 17.8 | 27.8 | 10.0 | 2.3 | 4.8 | 0.8 | 2.1 | 100 | Blue | Wire range : 1.5-2.5mm$^2$<br>A. W. G. : (16-14)<br>Max.current=27A |
| LBV5.5-4.6 | 4.6 | 18.2 | 31.2 | 13.0 | 3.4 | 6.7 | 1.0 | 2.75 | 100 | Yellow | Wire range : 4-6mm$^2$<br>A. W. G. : (12-10)<br>Max.current=48A |

## Nylon-Insulated Lipped Blade Terminals

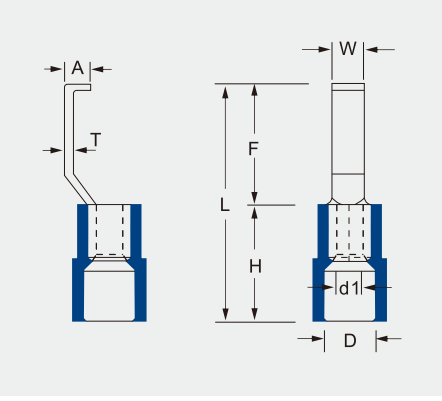


- Maximum electrical rating: 600 volts
- Maximum temperature: 105℃
- Terminals material : copper
- Plating: Tin plated
- Insulation material: easy entry nylon

CE RoHS

| ITEM NO . | DIMENSION mm | | | | | | | | PCS/ PACK | COLOR | EXPLANATION |
|---|---|---|---|---|---|---|---|---|---|---|---|
| | W | F | L | H | d1 | D | T | A | | | |
| LBNY1.25-4.6 | 4.6 | 17.8 | 27.8 | 11.0 | 1.7 | 4.3 | 0.8 | 2.1 | 100 | Red | Wire range : 0.5-1.5mm$^2$<br>A. W. G. : (22-16)<br>Max.current=19A |
| LBNY2-4.6 | 4.6 | 17.8 | 27.8 | 11.0 | 2.3 | 4.8 | 0.8 | 2.1 | 100 | Blue | Wire range : 1.5-2.5mm$^2$<br>A. W. G. : (16-14)<br>Max.current=27A |
| LBNY5.5-4.6 | 4.6 | 18.2 | 31.2 | 13.0 | 3.4 | 6.7 | 1.0 | 2.75 | 100 | Yellow | Wire range : 4-6mm$^2$<br>A. W. G. : (12-10)<br>Max.current=48A |

B

## Vinyl-Insulated Pin Terminals

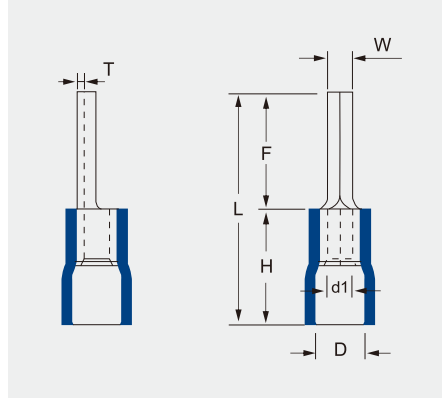


- Maximum electrical rating: 600 volts
- Maximum temperature: 75℃
- Terminals material : copper
- Plating: Tin plated
- Insulation material: vinyl (PVC)

CE SGS RoHS

| ITEM NO . | DIMENSION mm | | | | | | | PCS/ PACK | COLOR | EXPLANATION |
|---|---|---|---|---|---|---|---|---|---|---|
| | W | F | L | H | d1 | D | T | | | |
| PTV1.25-10 | 1.9 | 10.0 | 20.0 | 10.0 | 1.7 | 4.2 | 0.8 | 100 | Red | Wire range : 0.5-1.5mm² A. W. G. : (22-16) Max.current=19A |
| PTV1.25-12 | | 12.0 | 22.0 | | | | | | | |
| PTV1.25-18 | | 18.0 | 27.0 | | | | | | | |
| PTV2-10 | 1.9 | 10.0 | 20.0 | 10.0 | 2.3 | 4.7 | 0.8 | 100 | Blue | Wire range : 1.5-2.5mm² A. W. G. : (16-14) Max.current=27A |
| PTV2-12 | | 12.0 | 22.0 | | | | | | | |
| PTV2-18 | | 18.0 | 27.0 | | | | | | | |
| PTV5.5-13 | 2.8 | 13.0 | 26.0 | 13.0 | 3.4 | 6.5 | 1.0 | 100 | Yellow | Wire range : 4-6mm² A. W. G. : (12-10) Max.current=48A |

## Nylon-Insulated Pin Terminals

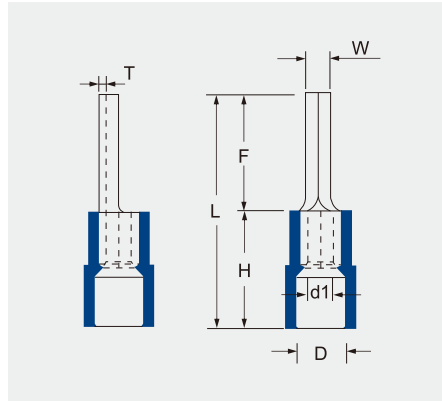


- Maximum electrical rating: 600 volts
- Maximum temperature: 105℃
- Terminals material : copper
- Plating: Tin plated
- Insulation material: easy entry nylon

CE SGS RoHS

| ITEM NO . | DIMENSION mm | | | | | | | PCS/ PACK | COLOR | EXPLANATION |
|---|---|---|---|---|---|---|---|---|---|---|
| | W | F | L | H | d1 | D | T | | | |
| PTNY1.25-10 | 1.9 | 10.0 | 21.0 | 11.0 | 1.7 | 4.3 | 0.8 | 100 | Red | Wire range : 0.5-1.5mm² A. W. G. : (22-16) Max.current=19A |
| PTNY1.25-12 | | 12.0 | 23.0 | | | | | | | |
| PTNY1.25-18 | | 18.0 | 28.0 | | | | | | | |
| PTNY2-10 | 1.9 | 10.0 | 21.0 | 11.0 | 2.3 | 4.8 | 0.8 | 100 | Blue | Wire range : 1.5-2.5mm² A. W. G. : (16-14) Max.current=27A |
| PTNY2-12 | | 12.0 | 23.0 | | | | | | | |
| PTNY2-18 | | 18.0 | 28.0 | | | | | | | |
| PTNY5.5-13 | 2.8 | 13.0 | 26.0 | 13.0 | 3.4 | 6.7 | 1.0 | 100 | Yellow | Wire range : 4-6mm² A. W. G. : (12-10) Max.current=48A |

B

## Vinyl-Insulated Blade Terminals

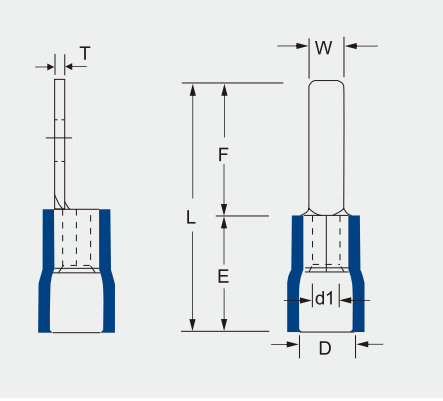


- Maximum electrical rating: 600 volts
- Maximum temperature: 75℃
- Terminals material : copper
- Plating: Tin plated
- Insulation material: vinyl (PVC)

CE RoHS

| ITEM NO. | DIMENSION mm | | | | | | | PCS/ PACK | COLOR | EXPLANATION |
|---|---|---|---|---|---|---|---|---|---|---|
| | W | F | L | H | d1 | D | T | | | |
| DBV1.25-10 | 2.3 | 10.0 | 20.0 | 10.0 | 1.7 | 4.2 | 0.8 | 100 | Red | Wire range : 0.5-1.5mm² A. W. G. : (22-16) Max.current=19A |
| DBV1.25-14 | 3.0 | 14.0 | 24.0 | | | | | | | |
| DBV1.25-18 | 2.2 | 18.0 | 28.0 | | | | | | | |
| DBV2-10 | 2.4 | 10.0 | 20.0 | 10.0 | 2.3 | 4.7 | 0.8 | 100 | Blue | Wire range : 1.5-2.5mm² A. W. G. : (16-14) Max.current=27A |
| DBV2-14 | 2.4 | 14.0 | 24.0 | | | | | | | |
| DBV2-18 | 2.2 | 18.0 | 28.0 | | | | | | | |
| DBV5.5-10 | 2.8 | 10.0 | 23.0 | 13.0 | 3.4 | 6.5 | 1.0 | 100 | Yellow | Wire range : 4-6mm² A. W. G. : (12-10) Max.current=48A |
| DBV5.5-14 | 4.5 | 14.0 | 27.0 | | | | | | | |
| DBV5.5-18 | 4.5 | 18.0 | 31.0 | | | | | | | |

## Nylon-Insulated Blade Terminals

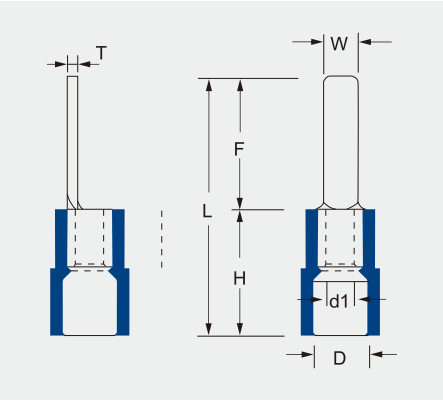


- Maximum electrical rating: 600 volts
- Maximum temperature: 105℃
- Terminals material : copper
- Plating: Tin plated
- Insulation material: easy entry nylon

CE RoHS

| ITEM NO. | DIMENSION mm | | | | | | | PCS/ PACK | COLOR | EXPLANATION |
|---|---|---|---|---|---|---|---|---|---|---|
| | W | F | L | H | d1 | D | T | | | |
| DBNY1.25-10 | 2.3 | 10.0 | 21.0 | 11.0 | 1.7 | 4.3 | 0.8 | 100 | Red | Wire range : 0.5-1.5mm² A. W. G. : (22-16) Max.current=19A |
| DBNY1.25-14 | 3.0 | 14.0 | 25.0 | | | | | | | |
| DBNY1.25-18 | 2.2 | 18.0 | 29.0 | | | | | | | |
| DBNY2-10 | 2.4 | 10.0 | 21.0 | 11.0 | 2.3 | 4.8 | 0.8 | 100 | Blue | Wire range : 1.5-2.5mm² A. W. G. : (16-14) Max.current=27A |
| DBNY2-14 | 2.4 | 14.0 | 25.0 | | | | | | | |
| DBNY2-18 | 2.2 | 18.0 | 29.0 | | | | | | | |
| DBNY5.5-10 | 2.8 | 10.0 | 23.0 | 13.0 | 3.4 | 6.7 | 1.0 | 100 | Yellow | Wire range : 4-6mm² A. W. G. : (12-10) Max.current=48A |
| DBNY5.5-14 | 4.5 | 14.0 | 27.0 | | | | | | | |
| DBNY5.5-18 | 4.5 | 18.0 | 31.0 | | | | | | | |

# 裸端子
# Non-Insulated Copper Terminals

www.cnhowder.com

## Non-Insulated Ring Terminals

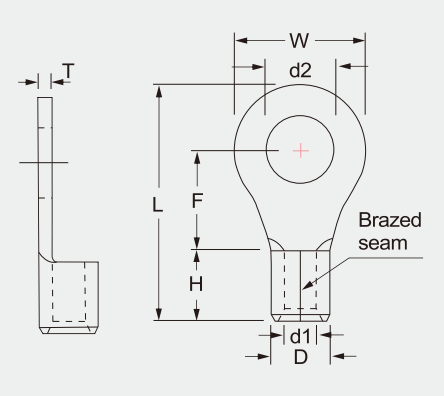


- Material
- Terminal Body: Copper
- Brazed Seam
- Plating: Tin

CE SGS RoHS

C

| ITEM NO. | STUD SIZE | | DIMENSION mm | | | | | | | | PCS/ PACK | EXPLANATION |
|---|---|---|---|---|---|---|---|---|---|---|---|---|
| | Metric | American | d2 | W | F | L | H | d1 | D | T | | |
| RNB1.25-3.2 | 3 | #4 | 3.2 | 5.7 | 4.95 | 12.6 | 4.8 | 1.7 | 3.4 | 0.8 | 100 | Wire range：0.5-1.5mm² A. W. G.：(22-16) Max.current=19A |
| RNB1.25-3.5S | 3.5 | #6 | 3.7 | | | | | | | | | |
| RNB1.25-3.5M | 3.5 | #6 | 3.7 | 6.6 | 6.3 | 14.4 | | | | | | |
| RNB1.25-3.5L | 3.5 | #6 | 3.7 | 8.0 | 7.0 | 15.8 | | | | | | |
| RNB1.25-4S | 4 | #8 | 4.3 | 6.6 | 6.3 | 14.4 | | | | | | |
| RNB1.25-4L | 4 | #8 | 4.3 | 8.0 | 7.0 | 15.8 | | | | | | |
| RNB1.25-5 | 5 | #10 | 5.3 | | | | | | | | | |
| RNB1.25-5L | 5 | #10 | 5.3 | 9.5 | 7.5 | 17.1 | | | | | | |
| RNB1.25-6 | 6 | 1/ 4 " | 6.5 | 11.6 | 11.2 | 21.8 | | | | | | |
| RNB1.25-8 | 8 | 5/16 " | 8.5 | | | | | | | | | |
| RNB1.25-10 | 10 | 3/8 " | 10.5 | 13.6 | 13.9 | 25.5 | | | | | | |
| RNB1.25-12 | 12 | 1 /2 " | 13.0 | 19.2 | 16.0 | 30.4 | | | | | | |
| RNB2-3.2 | 3 | #4 | 3.2 | 6.6 | 6.4 | 14.5 | 4.8 | 2.3 | 4.0 | 0.8 | 100 | Wire range：1.5-2.5mm² A. W. G.：(16-14) Max.current=27A |
| RNB2-3.5 | 3.5 | #6 | 3.7 | | | | | | | | | |
| RNB2-3.5M | 3.5 | #6 | 3.7 | 6.6 | 7.9 | 16.0 | | | | | | |
| RNB2-3.5L | 3.5 | #6 | 3.7 | 8.5 | 7.75 | 16.8 | | | | | | |
| RNB2-4S | 4 | #8 | 4.3 | 6.6 | 7.9 | 16.0 | | | | | | |
| RNB2-4L | 4 | #8 | 4.3 | 8.5 | 7.75 | 16.8 | | | | | | |
| RNB2-5S | 5 | #10 | 5.3 | | | | | | | | | |
| RNB2-5L | 5 | #10 | 5.3 | 9.5 | 7.5 | 17.1 | | | | | | |
| RNB2-6 | 6 | 1/ 4 " | 6.5 | 12.0 | 11.0 | 21.8 | | | | | | |
| RNB2-8 | 8 | 5/16 " | 8.5 | | | | | | | | | |
| RNB2-10 | 10 | 3/8 " | 10.5 | 13.6 | 13.9 | 25.5 | | | | | | |
| RNB2-12 | 12 | 1 /2 " | 13.0 | 19.2 | 16.0 | 30.4 | | | | | | |

## Non-Insulated Ring Terminals

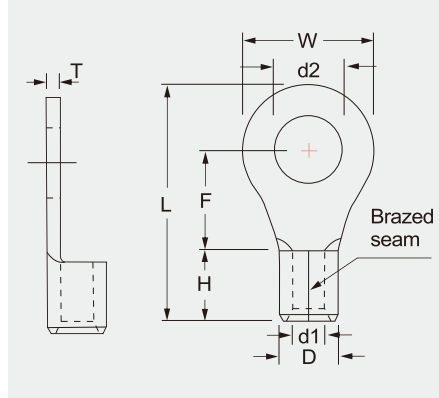


- Material
- Terminal Body: Copper
- Brazed Seam
- Plating: Tin

CE RoHS

C

| ITEM NO . | STUD SIZE | | DIMENSION mm | | | | | | | | PCS/ PACK | EXPLANATION |
|---|---|---|---|---|---|---|---|---|---|---|---|---|
| | Metric | American | d2 | W | F | L | H | d1 | D | T | | |
| RNB3.5-4 | 4 | #8 | 4.3 | 8.0 | 7.7 | 17.7 | 6.0 | 2.9 | 5.0 | 1.0 | 100 | Wire range : 2.5-4mm² A. W. G. : (14-12) Max.current=37A |
| RNB3.5-5S | 5 | #10 | 5.3 | | | | | | | | | |
| RNB3.5-6 | 6 | 1/ 4 " | 6.5 | 12.0 | 9.4 | 21.4 | | | | | | |
| RNB3.5-8 | 8 | 5/16 " | 8.5 | 15.0 | 13.5 | 27.0 | | | | | | |
| RNB5.5-3.5 | 3.5 | #6 | 3.7 | 7.2 | 5.9 | 15.5 | 6.0 | 3.4 | 5.5 | 1.0 | 100 | Wire range : 4-6mm² A. W. G. : (12-10) Max.current=48A |
| RNB5.5-4S | 4 | #8 | 4.3 | | | | | | | | | |
| RNB5.5-4L | 4 | #8 | 4.3 | 9.5 | 8.85 | 19.6 | | | | | | |
| RNB5.5-5 | 5 | #10 | 5.3 | 9.5 | 8.85 | 19.6 | | | | | | |
| RNB5.5-6 | 6 | 1/ 4 " | 6.5 | 12.0 | 10.5 | 22.5 | | | | | | |
| RNB5.5-8 | 8 | 5/16 " | 8.5 | 15.0 | 13.5 | 27.0 | | | | | | |
| RNB5.5-10 | 10 | 3/8 " | 10.5 | | | | | | | | | |
| RNB5.5-12 | 12 | 1 /2 " | 13.0 | 19.2 | 16.0 | 31.6 | | | | | | |
| RNB8-4S | 4 | #8 | 4.3 | 8.0 | 9.3 | 21.8 | 8.5 | 4.5 | 7.2 | 1.2 | 100 | Wire range : 6-10mm² A. W. G. : ( 8 ) Max.current=62A |
| RNB8-4L | 4 | #8 | 4.3 | 12.0 | 9.3 | 23.8 | | | | | | |
| RNB8-5S | 5 | #10 | 5.3 | 8.8 | 9.3 | 22.2 | | | | | | |
| RNB8-5M | 5 | #10 | 5.3 | 12.0 | 9.3 | 23.8 | | | | | | |
| RNB8-5L | 5 | #10 | 5.3 | 15.0 | 13.8 | 29.8 | | | | | | |
| RNB8-6S | 6 | 1 /4 " | 6.5 | 12.0 | 9.3 | 23.8 | | | | | | |
| RNB8-8 | 8 | 5/16 " | 8.5 | 15.0 | 13.8 | 29.8 | | | | | | |
| RNB8-10 | 10 | 3/8 " | 10.5 | | | | | | | | | |
| RNB8-12 | 12 | 1 /2 " | 13.0 | 20.0 | 15.0 | 33.5 | | | | | | |

## Non-Insulated Ring Terminals

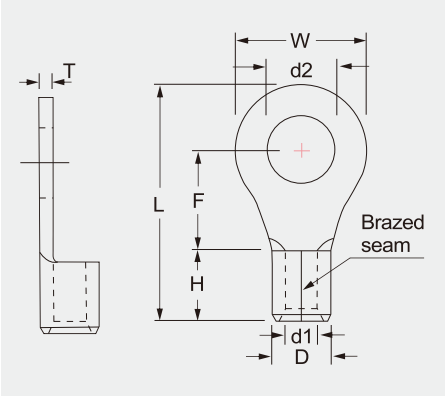


- Material
- Terminal Body: Copper
- Brazed Seam
- Plating: Tin

CE SGS RoHS

C

| ITEM NO . | STUD SIZE | | DIMENSION mm | | | | | | | | PCS/ PACK | EXPLANATION |
|---|---|---|---|---|---|---|---|---|---|---|---|---|
| | Metric | American | d2 | W | F | L | H | d1 | D | T | | |
| RNB14-4 | 4 | #8 | 4.3 | 12.0 | 13.3 | 29.8 | 10.5 | 5.8 | 9.0 | 1.4 | 100 | Wire range : 10-16mm² A. W. G. : ( 6 ) Max.current=88A |
| RNB14-5 | 5 | #10 | 5.3 | | | | | | | | | |
| RNB14-6S | 6 | 1 /4 " | 6.5 | | | | | | | | | |
| RNB14-8 | 8 | 5/16 " | 8.5 | 16.0 | 14.0 | 32.5 | | | | | | |
| RNB14-10 | 10 | 3/8 " | 10.5 | | | | | | | | | |
| RNB14-12 | 12 | 1 /2 " | 13.0 | 22.0 | 19.5 | 41.0 | | | | | | |
| RNB22-4 | 4 | #8 | 4.3 | 12.2 | 15.1 | 33.2 | 12.0 | 8.3 | 11.5 | 1.6 | 50 | Wire range : 16-25mm² A. W. G. : ( 4 ) Max.current=115A |
| RNB22-5S | 5 | #10 | 5.3 | | | | | | | | | |
| RNB22-5L | 5 | #10 | 5.3 | 16.5 | 13.5 | 33.7 | | | | | | |
| RNB22-6S | 6 | 1 /4 " | 6.5 | 12.2 | 15.1 | 33.2 | | | | | | |
| RNB22-6L | 6 | 1 /4 " | 6.5 | 16.5 | 13.5 | 33.7 | | | | | | |
| RNB22-8 | 8 | 5/16 " | 8.5 | | | | | | | | | |
| RNB22-10 | 10 | 3/8 " | 10.5 | | | | | | | | | |
| RNB22-12 | 12 | 1 /2 " | 13.0 | 22.0 | 19.5 | 42.5 | | | | | | |
| RNB38-5 | 5 | #10 | 5.3 | 15.3 | 17.4 | 39.0 | 14.0 | 9.4 | 13.3 | 1.7 | 20 | Wire range : 35mm² A. W. G. : ( 2 ) Max.current=160A |
| RNB38-6S | 6 | 1 /4 " | 6.5 | | | | | | | | | |
| RNB38-8S | 8 | 5/16 " | 8.5 | 15.3 | 17.4 | 39.0 | | | | | | |
| RNB38-10S | 10 | 3/8 " | 10.5 | 15.3 | 17.4 | 39.0 | | | | | | |
| RNB38-12 | 12 | 1/ 2 " | 13.0 | 22.0 | 17.7 | 42.7 | | | | | | |

## Non-Insulated Ring Terminals

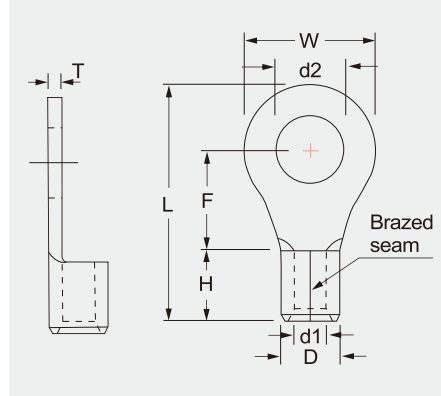


- Material
- Terminal Body: Copper
- Brazed Seam
- Plating: Tin

CE SGS RoHS

C

| ITEM NO . | STUD SIZE | | DIMENSION mm | | | | | | | EXPLANATION |
|---|---|---|---|---|---|---|---|---|---|---|
| | Metric | American | d2 | W | F | L | H | d1 | D | |
| RNB 60-6 | 6 | 1/4 | 6.4 | 22.0 | 20.7 | 49.7 | 18.0 | 12.0 | 15.4 | Wire range:50-70mm$^2$<br>A.W.G:1/0<br>Max.current=215A |
| RNB60-8 | 8 | 5/16 | 8.4 | | | | | | | |
| RNB 60-10 | 10 | 3/8 | 10.5 | | | | | | | |
| RNB 60-12 | 12 | 1/2 | 13.0 | | | | | | | |
| RNB 60-14 | 14 | 9/16 | 15.0 | 32.0 | 23.5 | 57.5 | | | | |
| RNB 60-16 | 16 | 5/8 | 17.0 | | | | | | | |
| RNB 60-18 | 18 | 11/16 | 19.0 | | | | | | | |
| RNB 60-20 | 20 | 3/4 | 21.0 | | | | | | | |
| RNB 70-6 | 6 | 1/4 | 6.4 | 22.0 | 20.0 | 51.0 | 19.0 | 13.5 | 17.5 | Wire range:70-95mm$^2$<br>A.W.G:2/0<br>Max.current=235A |
| RNB 70-8 | 8 | 5/16 | 8.4 | | | | | | | |
| RNB 70-10 | 10 | 3/8 | 10.5 | | | | | | | |
| RNB 70-12 | 12 | 1/2 | 13.0 | | | | | | | |
| RNB 70-14 | 14 | 9/16 | 15.0 | 32.0 | 26.0 | 61.0 | | | | |
| RNB 70-16 | 16 | 5/8 | 17.0 | | | | | | | |
| RNB 70-18 | 18 | 11/16 | 19.0 | | | | | | | |
| RNB 70-20 | 20 | 3/4 | 21.0 | | | | | | | |
| RNB80-6 | 6 | 1/4 | 6.4 | 27.0 | 20.7 | 54.2 | 20.0 | 15.0 | 19.5 | Wire range:95-120mm$^2$<br>A.W.G:3/0<br>Max.current=265A |
| RNB80-8 | 8 | 5/16 | 8.4 | | | | | | | |
| RNB 80-10 | 10 | 3/8 | 10.5 | | | | | | | |
| RNB 80-12 | 12 | 1/2 | 13.0 | | | | | | | |
| RNB 80-14 | 14 | 9/16 | 15.0 | 32.0 | 32.0 | 68.0 | | | | |
| RNB 80-16 | 16 | 5/8 | 17.0 | | | | | | | |
| RNB 80-18 | 18 | 11/16 | 19.0 | | | | | | | |
| RNB 80-20 | 20 | 3/4 | 21.0 | | | | | | | |
| RNB 100-6 | 6 | 1/4 | 6.4 | 28.5 | 20.4 | 55.6 | 21.0 | 17.0 | 22.5 | Wire range:120-150mm$^2$<br>A.W.G:4/0<br>Max.current=300A |
| RNB 100-8 | 8 | 5/16 | 8.4 | | | | | | | |
| RNB 100-10 | 10 | 3/8 | 10.5 | | | | | | | |
| RNB 100-12 | 12 | 1/2 | 13.0 | | | | | | | |
| RNB 100-14 | 14 | 9/16 | 15.0 | 32.0 | 32.0 | 69.0 | | | | |
| RNB 100-16 | 16 | 5/8 | 17.0 | | | | | | | |
| RNB 100-18 | 18 | 11/16 | 19.0 | | | | | | | |
| RNB 100-20 | 20 | 3/4 | 21.0 | | | | | | | |

## Non-Insulated Ring Terminals

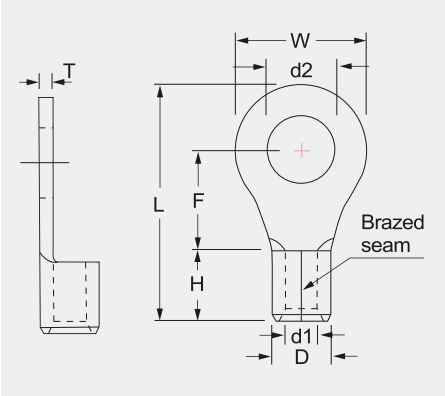


- Material
  - Terminal Body: Copper
  - Brazed Seam
  - Plating: Tin

CE SGS RoHS

C

| ITEM NO. | STUD SIZE | | DIMENSION mm | | | | | | | EXPLANATION |
|---|---|---|---|---|---|---|---|---|---|---|
| | Metric | American | d2 | W | F | L | H | d1 | D | |
| RNB 150-8 | 8 | 5/16 | 8.4 | 36.5 | 23.0 | 66.0 | 27.0 | 20.0 | 27.0 | Wire range:150-185mm² A.W.G:250/300 Max.current=395A |
| RNB 150-10 | 10 | 3/8 | 10.5 | | | | | | | |
| RNB 150-12 | 12 | 1/2 | 13.0 | | | | | | | |
| RNB 150-14 | 14 | 9/16 | 15.0 | | | | | | | |
| RNB 150-16 | 16 | 5/8 | 17.0 | | | | | | | |
| RNB 150-18 | 18 | 11/16 | 19.0 | | 36.0 | 81.0 | | | | |
| RNB 150-20 | 20 | 3/4 | 21.0 | | | | | | | |
| RNB 180-8 | 8 | 5/16 | 8.4 | 38.5 | 24.5 | 69.0 | 28.5 | 21.0 | 28.6 | Wire range:185-240mm² A.W.G:300/350 Max.current=440A |
| RNB 180-10 | 10 | 3/8 | 10.5 | | | | | | | |
| RNB 180-12 | 12 | 1/2 | 13.0 | | | | | | | |
| RNB 180-14 | 14 | 9/16 | 15.0 | | | | | | | |
| RNB 180-16 | 16 | 5/8 | 17.0 | | | | | | | |
| RNB 180-18 | 18 | 11/16 | 19.0 | | 39 | 86.6 | | | | |
| RNB 180-20 | 20 | 3/4 | 21.0 | | | | | | | |
| RNB 200-8 | 8 | 5/16 | 8.4 | 44.0 | 24.5 | 78.0 | 31.5 | 24.0 | 32.6 | Wire range:240-300mm² A.W.G:400/500 Max.current=470A |
| RNB 200-10 | 10 | 3/8 | 10.5 | | | | | | | |
| RNB 200-12 | 12 | 1/2 | 13.0 | | | | | | | |
| RNB 200-14 | 14 | 9/16 | 15.0 | | | | | | | |
| RNB 200-16 | 16 | 5/8 | 17.0 | | | | | | | |
| RNB 200-18 | 18 | 11/16 | 19.0 | | 37.5 | 91.0 | | | | |
| RNB 200-20 | 20 | 3/4 | 21.0 | | | | | | | |
| RNB 325-8 | 8 | 5/16 | 8.4 | 50.5 | 33.5 | 87.5 | 35.5 | 28.5 | 37.1 | Wire range:300-400mm² A.W.G:500/600 Max.current=650A |
| RNB 325-10 | 10 | 3/8 | 10.5 | | | | | | | |
| RNB 325-12 | 12 | 7/16 | 13.0 | | | | | | | |
| RNB 325-14 | 14 | 9/16 | 15.0 | | | | | | | |
| RNB 325-16 | 16 | 5/8 | 17.0 | | | | | | | |
| RNB 325-18 | 18 | 11/16 | 19.0 | | 45.0 | 105.7 | | | | |
| RNB 325-20 | 20 | 3/4 | 21.0 | | | | | | | |
| RNB 325-22 | 22 | 7/8 | 23.0 | | | | | | | |
| RNB 325-24 | 24 | 15/16 | 25.0 | | | | | | | |
| RNB 325-27 | 27 | 1 | 28.0 | | | | | | | |

## Non-Insulated Spade Terminals

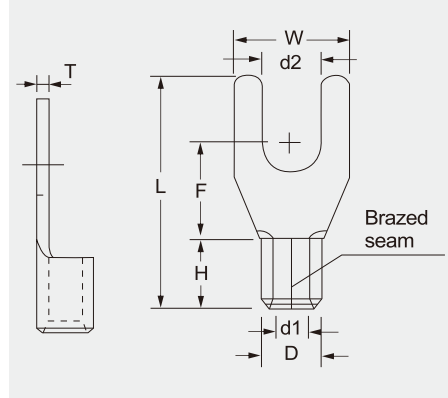


- Material
- Terminal Body: Copper
- Brazed Seam
- Plating: Tin

CE RoHS

C

| ITEM NO . | STUD SIZE | | DIMENSION mm | | | | | | | | PCS/ PACK | EXPLANATION |
|---|---|---|---|---|---|---|---|---|---|---|---|---|
| | Metric | American | d2 | W | F | L | H | d1 | D | T | | |
| SNB1.25-3.2 | 3 | #4 | 3.2 | 5.7 | 6.5 | 16.0 | 4.8 | 1.7 | 3.4 | 0.8 | 100 | Wire range : 0.5-1.5mm² A. W. G. : ( 22-16 ) Max.current=19A |
| SNB1.25-3.5S | 3.5 | #6 | 3.7 | | | | | | | | | |
| SNB1.25-3.5L | 3.5 | #6 | 3.7 | 6.4 | | | | | | | | |
| SNB1.25-4S | 4 | #8 | 4.3 | 6.4 | | | | | | | | |
| SNB1.25-4M | 4 | #8 | 4.3 | 7.2 | | | | | | | | |
| SNB1.25-4L | 4 | #8 | 4.3 | 8.1 | | | | | | | | |
| SNB1.25-5S | 5 | #10 | 5.3 | | | | | | | | | |
| SNB1.25-5L | 5 | #10 | 5.3 | 9.5 | | | | | | | | |
| SNB1.25-6S | 6 | 1/ 4 " | 6.5 | | | | | | | | | |
| SNB1.25-6L | 6 | 1/ 4 " | 6.5 | 12.0 | 11.0 | 22.0 | | | | | | |
| SNB1.25-8 | 8 | 5/ 16 " | 8.5 | 13.5 | 11.5 | 21.5 | | | | | | |
| SNB2-3.2 | 3 | #4 | 3.2 | 5.7 | 6.5 | 16.0 | 4.8 | 2.3 | 4.0 | 0.8 | 100 | Wire range : 1.5-2.5mm² A. W. G. : ( 16-14 ) Max.current=27A |
| SNB2-3.5S | 3.5 | #6 | 3.7 | | | | | | | | | |
| SNB2-3.5L | 3.5 | #6 | 3.7 | 6.0 | | | | | | | | |
| SNB2-4S | 4 | #8 | 4.3 | 6.4 | | | | | | | | |
| SNB2-4M | 4 | #8 | 4.3 | 7.2 | | | | | | | | |
| SNB2-4L | 4 | #8 | 4.3 | 8.1 | | | | | | | | |
| SNB2-5S | 5 | #10 | 5.3 | | | | | | | | | |
| SNB2-5L | 5 | #10 | 5.3 | 9.5 | | | | | | | | |
| SNB2-6S | 6 | 1/ 4 " | 6.5 | | | | | | | | | |
| SNB2-6L | 6 | 1/ 4 " | 6.5 | 12.0 | 11.0 | 22.0 | | | | | | |
| SNB2-8 | 8 | 5/ 16 " | 8.5 | 13.5 | 11.5 | 21.8 | | | | | | |

## Non-Insulated Spade Terminals

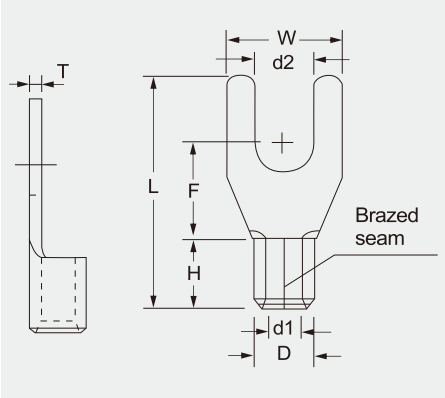


- Material
  - Terminal Body: Copper
  - Brazed Seam
  - Plating: Tin

CE SGS RoHS

C

| ITEM NO . | STUD SIZE | | DIMENSION mm | | | | | | | | PCS/ PACK | EXPLANATION |
|---|---|---|---|---|---|---|---|---|---|---|---|---|
| | Metric | American | d2 | W | F | L | H | d1 | D | T | | |
| SNB3.5-4 | 4 | #8 | 4.3 | 8.0 | 7.7 | 18.3 | 6.0 | 2.9 | 5.0 | 1.0 | 100 | Wire range : 2.5-4mm² A. W. G. : ( 14-12 ) Max.current=37A |
| SNB3.5-5 | 5 | #10 | 5.3 | | | | | | | | | |
| SNB3.5-6 | 6 | 1/ 4 " | 6.5 | 12.0 | 9.1 | 21.5 | | | | | | |
| SNB3.5-8 | 8 | 5/16 " | 8.5 | 14.0 | 11.5 | 23.7 | | | | | | |
| SNB5.5-3.5 | 3.5 | #6 | 3.7 | 8.3 | 7.0 | 18.5 | 6.0 | 3.4 | 5.5 | 1.0 | 100 | Wire range : 4-6mm² A. W. G. : ( 10-12 ) Max.current=48A |
| SNB5.5-4SS | 4 | #8 | 4.3 | 7.2 | 7.5 | 17.4 | | | | | | |
| SNB5.5-4S | 4 | #8 | 4.3 | 8.3 | 7.0 | 18.5 | | | | | | |
| SNB5.5-4L | 4 | #8 | 4.3 | 9.0 | 7.0 | 18.5 | | | | | | |
| SNB5.5-5 | 5 | #10 | 5.3 | | | | | | | | | |
| SNB5.5-6S | 6 | 1/ 4 " | 6.5 | | | | | | | | | |
| SNB5.5-6L | 6 | 1/ 4 " | 6.5 | 12.0 | 12.0 | 24.7 | | | | | | |
| SNB5.5-8 | 8 | 5/16 " | 8.5 | 14.0 | 11.5 | 23.7 | | | | | | |
| SNB8-4 | 4 | #8 | 4.3 | 9.0 | 7.6 | 20.8 | 8.5 | 4.5 | 7.2 | 1.2 | 100 | Wire range : 6-10mm² A. W. G. : ( 8 ) Max.current=62A |
| SNB8-5 | 5 | #10 | 5.3 | 9.0 | 8.1 | | | | | | | |
| SNB8-6 | 6 | 1/4 " | 6.5 | 12.0 | 9.2 | 23.8 | | | | | | |
| SNB8-8 | 8 | 5/16 " | 8.5 | 13.8 | 10.7 | 25.4 | | | | | | |
| SNB14-4 | 4 | #8 | 4.3 | 9.0 | 9.5 | 25.5 | 10.5 | 5.8 | 9 | 1.4 | 100 | Wire range : 10-16mm² A. W. G. : ( 6 ) Max.current=88A |
| SNB14-5 | 5 | #10 | 5.3 | | | | | | | | | |
| SNB14-6 | 6 | 1/4 " | 6.5 | 11.0 | 9.5 | 25.5 | | | | | | |
| SNB14-8 | 8 | 5/16 " | 8.5 | 13.8 | 10.7 | 28.5 | | | | | | |
| SNB22-5 | 5 | #10 | 5.3 | 11.0 | 9.5 | 27.8 | 12 | 7.7 | 11.5 | 1.6 | 50 | Wire range : 16-25mm² A. W. G. : ( 4 ) Max.current=115A |
| SNB22-6 | 6 | 1/4 " | 6.5 | | | | | | | | | |
| SNB22-8 | 8 | 5/16 " | 8.5 | 16.5 | 13.5 | 33.5 | | | | | | |

C

## Non-Insulated Pin Terminals

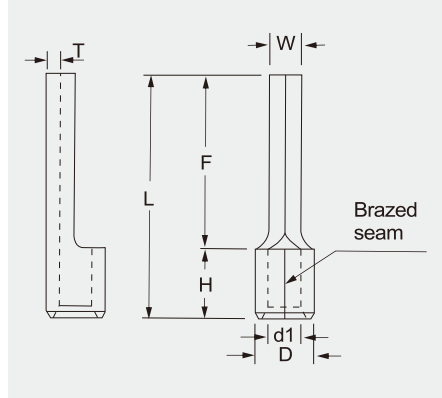


- Material
- Terminal Body: Copper
- Brazed Seam
- Plating: Tin

CE RoHS

| ITEM NO. | DIMENSION mm | | | | | | | PCS/ PACK | EXPLANATION |
|---|---|---|---|---|---|---|---|---|---|
| | W | F | L | H | d1 | D | T | | |
| PTN1.25-10 | 1.9 | 10.0 | 14.8 | 4.8 | 1.7 | 3.4 | 0.8 | 100 | Wire range : 0.5-1.5mm² A. W. G. : (22-16) Max.current=19A |
| PTN1.25-12 | | 12.0 | 16.8 | | | | | | |
| PTN1.25-18 | | 18.0 | 21.8 | | | | | | |
| PTN2-10 | 1.9 | 10.0 | 14.8 | 4.8 | 2.3 | 4.0 | 0.8 | 100 | Wire range : 1.5-2.5mm² A. W. G. : (16-14) Max.current=27A |
| PTN2-12 | | 12.0 | 16.8 | | | | | | |
| PTN2-18 | | 18.0 | 21.8 | | | | | | |
| PTN5.5-13 | 2.8 | 13.0 | 19.0 | 6.0 | 3.4 | 5.5 | 1.0 | 100 | Wire range : 4-6mm² A. W. G. : (12-10) Max.current=48A |

## Non-Insulated Locking Spade Terminals

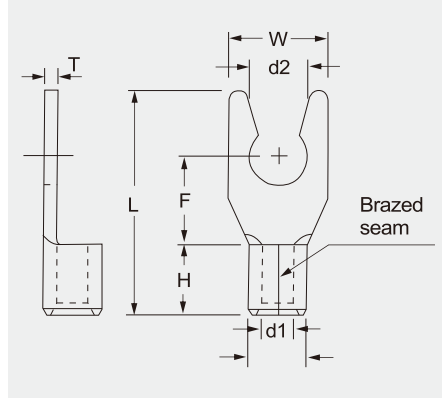


- Material
- Terminal Body: Copper
- Brazed Seam
- Plating: Tin

CE RoHS

| ITEM NO. | STUD SIZE | | DIMENSION mm | | | | | | | | PCS/ PACK | EXPLANATION |
|---|---|---|---|---|---|---|---|---|---|---|---|---|
| | Metric | American | d2 | W | F | L | H | d1 | D | T | | |
| LSNB1.25-4 | 4 | #8 | 4.3 | 7.2 | 6.5 | 16.0 | 4.8 | 1.7 | 3.4 | 0.8 | 100 | Wire range : 0.5-1.5mm² A. W. G. : (22-16) Max.current=19A |
| LSNB1.25-5S | 5 | #10 | 5.3 | 8.1 | | | | | | | | |
| LSNB2-3.5 | 3.5 | #6 | 3.7 | 6.0 | 6.5 | 16.0 | 4.8 | 2.3 | 4.0 | 0.8 | 100 | Wire range : 1.5-2.5mm² A. W. G. : (16-14) Max.current=27A |
| LSNB2-4 | 4 | #8 | 4.3 | 7.2 | | | | | | | | |
| LSNB2-5 | 5 | #10 | 5.3 | 8.1 | | | | | | | | |
| LSNB5.5-4 | 4 | #8 | 4.3 | 8.3 | 7.0 | 18.5 | 6.0 | 3.4 | 5.5 | 1.0 | 100 | Wire range : 4-6mm² A. W. G. : (12-10) Max.current=48A |
| LSNB5.5-5 | 5 | #10 | 5.3 | 9.0 | | | | | | | | |
| LSNB5.5-6 | 6 | 1/4 " | 6.5 | 12.0 | 12.0 | 24.7 | | | | | | |

## Non-Insulated Blade Terminals

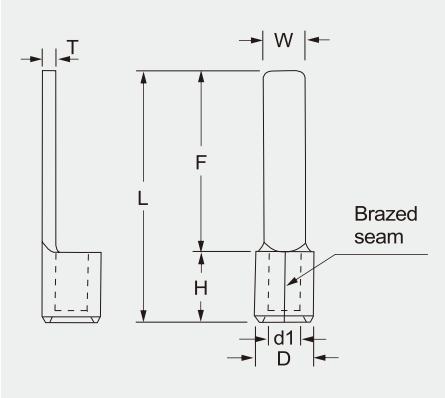


- Material
  - Terminal Body: Copper
  - Brazed Seam
  - Plating: Tin

CE SGS RoHS

C

| ITEM NO . | DIMENSION mm | | | | | | | PCS/ PACK | EXPLANATION |
|---|---|---|---|---|---|---|---|---|---|
| | W | F | L | H | d1 | D | T | | |
| DBN1.25-10 | 2.3 | 10.0 | 14.8 | 4.8 | 1.7 | 3.4 | 0.8 | 100 | Wire range : 0.5-1.5mm$^2$<br>A. W. G. : ( 22-16 )<br>Max.current=19A |
| DBN1.25-14 | 3.0 | 14.0 | 18.8 | | | | | | |
| DBN1.25-18 | 2.2 | 18.0 | 22.8 | | | | | | |
| DBN2-10 | 2.4 | 10.0 | 14.8 | 4.8 | 2.3 | 4.0 | 0.8 | 100 | Wire range : 1.5-2.5mm$^2$<br>A. W. G. : ( 16-14 )<br>Max.current=27A |
| DBN2-14 | 2.4 | 14.0 | 18.8 | | | | | | |
| DBN2-18 | 2.2 | 18.0 | 22.8 | | | | | | |
| DBN5.5-10 | 2.8 | 10.0 | 16.0 | | | | | | |
| DBN5.5-14 | 4.5 | 14.0 | 20.0 | 6.0 | 3.4 | 5.5 | 1.0 | 100 | Wire range : 4-6mm$^2$<br>A. W. G. : ( 12-10 )<br>Max.current=48A |
| DBN5.5-18 | 4.5 | 18.0 | 24.0 | | | | | | |

# PVC / 尼龍 / 熱縮 快速連接端子

## Vinyl / Nylon / Heat shrinkable–Insulated Quick Disconnectors

www.cnhowder.com

## Heat shrinkable Fully–Insulated Female Quick Disconnectors

- Contraction ratio 3:1
- Excellent conductance performance
- Excellent impact resistance
- Good tensile and mechanical damage
- Stability of high elasticity
- Waterproof and moistureproof
- Temperature tolerance range: -55℃ ~125℃
- Minimum systolic temperature: 80 degrees centigrade
- Minimum complete contraction temperature: 200℃

CE RoHS

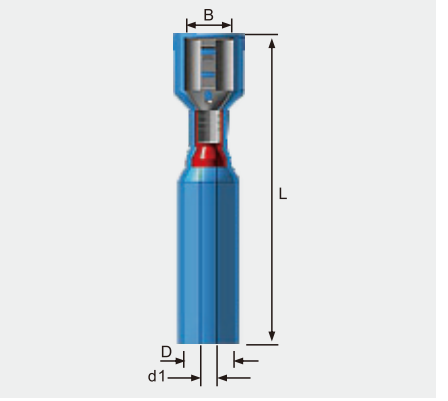


| PRODUCT NUMBER | D | d1 | B | SCREW SIZE | L MAX | COLOUR | GAUGE | END THICKNESS |
|---|---|---|---|---|---|---|---|---|
| HD–DS–P06R63E | 6. 2 | 1. 6 | 6.6 | 6.3*0.8 | 30 | ● | 0. 5–1. 5mm²(AWG22–18) | 0. 4mm |
| HD–DS–P06R63E | 6. 2 | 2. 2 | 6.6 | 6.3*0.8 | 30 | ● | 1. 5–2. 5mm²(AWG16–14) | 0. 4mm |
| HD–DS–P06R63E | 6. 8 | 3. 4 | 6.6 | 6.3*0.8 | 32 | ● | 4. 0–6. 0mm²(AWG12–10) | 0. 4mm |

## Heat shrinkable–Insulated Male Quick Disconnectors

- Contraction ratio 3:1
- Excellent conductance performance
- Excellent impact resistance
- Good tensile and mechanical damage
- Stability of high elasticity
- Waterproof and moistureproof
- Temperature tolerance range: -55℃ ~125℃
- Minimum systolic temperature: 80 degrees centigrade
- Minimum complete contraction temperature: 200℃

CE RoHS

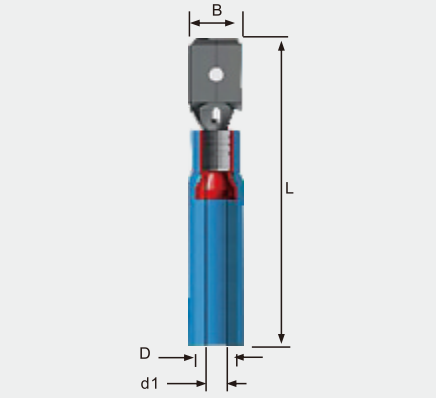


| PRODUCT NUMBER | D | d1 | B | E | L | COLOUR | GAUGE | END THICKNESS |
|---|---|---|---|---|---|---|---|---|
| HD–DS–T06R63E | 6. 2 | 1. 6 | 6.3*0.8 | 21 | 28 | ● | 0. 5–1. 5mm²(AWG22–18) | 0. 4mm |
| HD–DS–T06R63E | 6. 2 | 2. 2 | 6.3*0.8 | 21 | 28 | ● | 1. 5–2. 5mm²(AWG16–14) | 0. 4mm |
| HD–DS–T06R63E | 6. 8 | 3. 4 | 6.3*0.8 | 25 | 32 | ● | 4. 0–6. 0mm²(AWG12–10) | 0. 4mm |

## Vinyl-Insulated Female Quick Disconnects

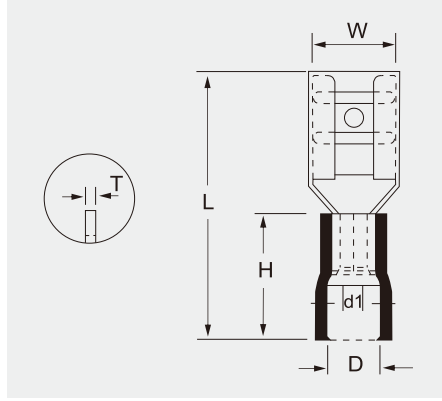


- Maximum electrical rating: 75℃, 300V
- Insulation: Vinyl
- Terminal Body: Brass
- Plating: Tin

CE SGS RoHS

D

| ITEM NO . | Nema Tab | DIMENSION mm | | | | | | PCS/ PACK | COLOR | EXPLANATION |
|---|---|---|---|---|---|---|---|---|---|---|
| | | W | L | H | d1 | D | T | | | |
| FDD1.25-110(5) | 0.5×2.8 | 3.8 | 19.0 | 10.0 | 1.7 | 3.7 | 0.3 | 100 | Red | Wire range : 0.5-1.5mm² A. W. G : ( 22-16 ) Max.current=10A |
| FDD1.25-110(8) | 0.8×2.8 | | | | | | | | | |
| FDD1.25-187(5) | 0.5×4.75 | 5.8 | 19.0 | | | | 0.35 | | | |
| FDD1.25-187(8) | 0.8×4.75 | | | | | | | | | |
| FDD1.25-205(5) | 0.5×5.2 | 6.5 | 19.0 | | | | | | | |
| FDD1.25-250 | 0.8×6.35 | 7.5 | 21.0 | | | | 0.4 | | | |
| FDD1.25-312 | 0.8×8.0 | 9.1 | 24.0 | | | | | | | |
| FDD2-110(5) | 0.5×2.8 | 3.8 | 19.0 | 10.0 | 2.3 | 4.3 | | 100 | Blue | Wire range : 1.5-2.5mm² A. W. G : ( 16-14 ) Max.current=15A |
| FDD2-110(8) | 0.8×2.8 | | | | | | | | | |
| FDD2-187(5) | 0.5×4.75 | 5.8 | 19.0 | | | | 0.35 | | | |
| FDD2-187(8) | 0.8×4.75 | 5.8 | | | | | | | | |
| FDD2-205(5) | 0.5×5.2 | 6.5 | 19.0 | | | | | | | |
| FDD2-250 | 0.8×6.35 | 7.5 | 21.0 | | | | 0.4 | | | |
| FDD2-312 | 0.8×8.0 | 9.1 | 24.0 | | | | | | | |
| FDD5.5-250 | 0.8×6.35 | 7.5 | 24.0 | 13.0 | 3.4 | 5.6 | 0.4 | 100 | Yellow | Wire range : 4-6mm² A. W. G : ( 12-10 ) Max.current=24A |
| FDD5.5-375 | 1.2×9.4 | 10.9 | 28.6 | | | | 0.5 | | | |

## Vinyl-Insulated Male Quick Disconnects

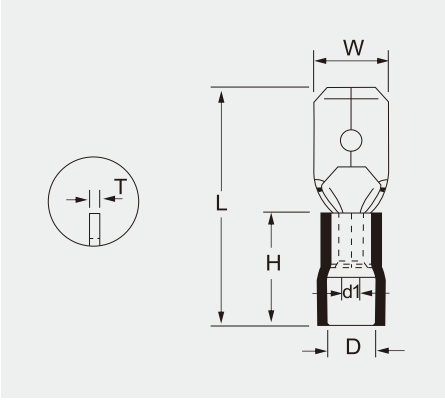


- Maximum electrical rating: 75℃, 300V
- Insulation: Vinyl
- Terminal Body: Brass
- Plating: Tin

CE SGS RoHS

| ITEM NO. | Nema Tab | DIMENSION mm | | | | | | PCS/ PACK | COLOR | EXPLANATION |
|---|---|---|---|---|---|---|---|---|---|---|
| | | W | L | H | d1 | D | T | | | |
| MDD1.25-110(5) | 0.5×2.8 | 2.8 | 19.0 | 10.0 | 1.7 | 3.7 | 0.5 | 100 | Red | Wire range : 0.5-1.5mm² A. W. G : ( 22-16 ) Max.current=10A |
| MDD1.25-110(8) | 0.8×2.8 | | | | | | 0.4 | | | |
| MDD1.25-187(5) | 0.5×4.75 | 4.75 | 19.0 | | | | 0.5 | | | |
| MDD1.25-187(8) | 0.8×4.75 | | | | | | 0.4 | | | |
| MDD1.25-250 | 0.8×6.35 | 6.35 | 21.0 | | | | | | | |
| MDD2-110(5) | 0.5×4.75 | 2.8 | 19.0 | 10.0 | 2.3 | 4.3 | 0.5 | 100 | Blue | Wire range : 1.5-2.5mm² A. W. G : ( 16-14) Max.current=15A |
| MDD2-187(5) | 0.5×4.75 | 4.75 | 19.0 | | | | | | | |
| MDD2-187(8) | 0.8×4.75 | | | | | | 0.4 | | | |
| MDD2-250 | 0.8×6.35 | 6.35 | 21.0 | | | | | | | |
| MDD5.5-250 | 0.8×6.35 | 6.35 | 25.0 | 13.0 | 3.4 | 5.6 | 0.4 | 100 | Yellow | Wire range : 4-6mm² A. W. G : ( 12-10) Max.current=24A |

## Vinyl-Insulated Piggy Back Quick Disconnects

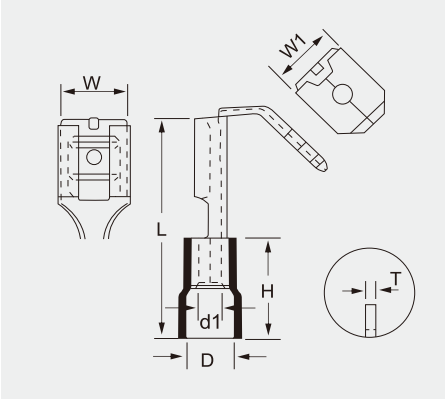


- Maximum electrical rating: 75℃, 300V
- Insulation: Vinyl
- Terminal Body: Brass
- Plating: Tin

CE SGS RoHS

| ITEM NO. | Nema Tab | DIMENSION mm | | | | | | | PCS/ PACK | COLOR | EXPLANATION |
|---|---|---|---|---|---|---|---|---|---|---|---|
| | | W | W 1 | L | H | d1 | D | T | | | |
| PBDD1.25-250 | 0.8×6.35 | 7.5 | 6.3 | 21.5 | 10.0 | 1.7 | 3.8 | 0.4 | 100 | Red | Wire range : 0.5-1.5mm² A. W. G : ( 22-16 ) Max.current=10A |
| PBDD2-250 | 0.8×6.35 | 7.5 | 6.3 | 21.5 | 10.0 | 2.3 | 4.3 | 0.4 | 100 | Blue | Wire range : 1.5-2.5mm² A. W. G : ( 16-14) Max.current=15A |
| PBDD5.5-250 | 0.8×6.35 | 7.5 | 6.3 | 24.0 | 13.0 | 3.4 | 5.6 | 0.4 | 100 | Yellow | Wire range : 4-6mm² A. W. G : ( 12-10) Max.current=24A |

D

## Vinyl-Fully Insulated Female Quick Disconnects

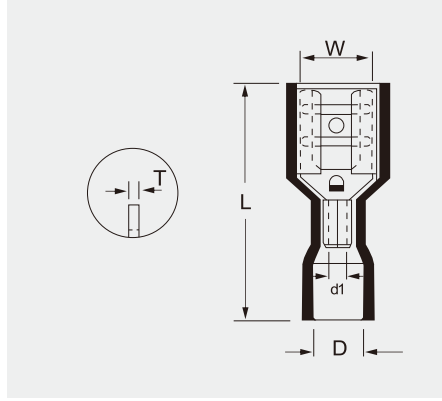


- Maximum electrical rating: 75℃, 300V
- Insulation: Vinyl
- Terminal Body: Brass
- Plating: Tin

CE SGS RoHS

| ITEM NO . | Nema Tab | DIMENSION mm | | | | | PCS/ PACK | COLOR | EXPLANATION |
|---|---|---|---|---|---|---|---|---|---|
| | | W | L | d1 | D | T | | | |
| FDFD1.25-110(5) | 0.5×2.8 | 3.8 | 19.0 | 1.7 | 3.7 | 0.3 | 100 | Red | Wire range : 0.5-1.5mm² A. W. G : ( 22-16 ) Max.current=10A |
| FDFD1.25-110(8) | 0.8×2.8 | | | | | | | | |
| FDFD1.25-187(5) | 0.5×4.75 | 5.8 | 20.0 | | | 0.35 | | | |
| FDFD1.25-187(8) | 0.8×4.75 | | | | | | | | |
| FDFD1.25-250 | 0.8×6.35 | 7.5 | 21.5 | | | 0.4 | | | |
| FDFD2-110(5) | 0.5×2.8 | 3.8 | 19.0 | 2.3 | 4.2 | 0.3 | 100 | Blue | Wire range : 1.5-2.5mm² A. W. G : ( 16-14 ) Max.current=15A |
| FDFD2-110(8) | 0.8×2.8 | | | | | | | | |
| FDFD2-187(5) | 0.5×4.75 | 5.8 | 20.0 | | | 0.35 | | | |
| FDFD2-187(8) | 0.8×4.75 | | | | | | | | |
| FDFD2-250 | 0.8×6.35 | 7.5 | 21.5 | | | 0.4 | | | |
| FDFD5.5-250 | 0.8×6.35 | 7.5 | 25.0 | 3.4 | 5.6 | 0.4 | 100 | Yellow | Wire range : 4-6mm² A. W. G : ( 12-10 ) Max.current=24A |

## Vinyl-Insulated Bullet-Male Quick Disconnects

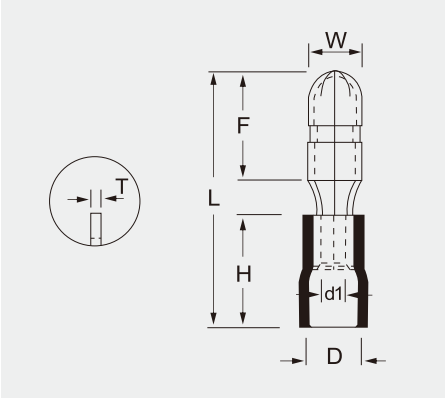


- Maximum electrical rating: 75℃, 300V
- Insulation: Vinyl
- Terminal Body: Brass
- Plating: Tin

CE SGS RoHS

| ITEM NO. | DIMENSION mm | | | | | | | PCS/ PACK | COLOR | EXPLANATION |
|---|---|---|---|---|---|---|---|---|---|---|
| | W | F | L | H | d1 | D | T | | | |
| MPD1.25-156 | 4.0 | 9.0 | 21.0 | 10.0 | 1.7 | 3.8 | 0.4 | 100 | Red | Wire range : 0.5-1.5mm² A. W. G : ( 22-16 ) Max.current=10A |
| MPD2-156 | 4.0 | 9.0 | 21.0 | 10.0 | 2.3 | 4.3 | 0.4 | 100 | Blue | Wire range : 1.5-2.5mm² A. W. G : ( 16-14 ) Max.current=15A |
| MPD2-195 | 5.0 | 9.0 | 21.0 | | | | | | | |
| MPD5.5-195 | 5.0 | 9.0 | 24.0 | 13.0 | 3.4 | 5.6 | 0.4 | 100 | Yellow | Wire range : 4-6mm² A. W. G : ( 12-10 ) Max.current=24A |

D

## Vinyl-Insulated Bullet-Female Quick Disconnects

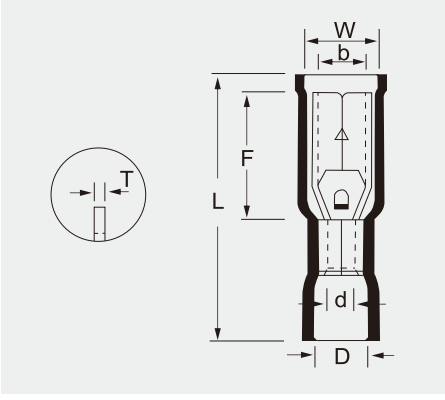


- Maximum electrical rating: 75℃, 300V
- Insulation: Vinyl
- Terminal Body: Brass
- Plating: Tin

CE SGS RoHS

| ITEM NO. | DIMENSION mm | | | | | | PCS/ PACK | COLOR | EXPLANATION |
|---|---|---|---|---|---|---|---|---|---|
| | W | F | L | d1 | D | T | | | |
| FRD1.25-156 | 3.9 | 13.0 | 23.3 | 1.7 | 3.8 | 0.4 | 100 | Red | Wire range : 0.5-1.5mm² A. W. G : ( 22-16 ) Max.current=10A |
| FRD2-156 | 3.9 | 14.0 | 23.3 | 2.3 | 4.3 | 0.4 | 100 | Blue | Wire range : 1.5-2.5mm² A. W. G : ( 16-14 ) Max.current=15A |
| FRD2-195 | 4.9 | 14.0 | 23.3 | 2.3 | 4.3 | 0.4 | | | |
| FRD5.5-195 | 4.9 | 14.0 | 25.0 | 3.4 | 5.6 | 0.40 | 100 | Yellow | Wire range : 4-6mm² A. W. G : ( 12-10 ) Max.current=24A |

D

## Nylon-Insulated Bullet-Female Quick Disconnects

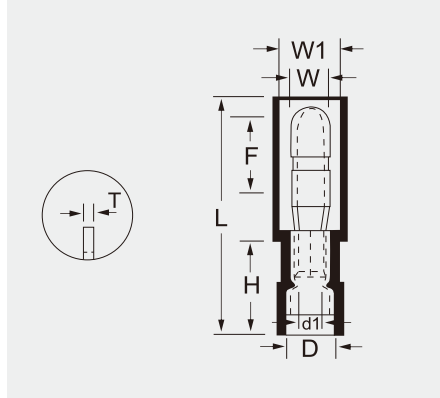


- Maximum electrical rating: 105℃, 300V
- Insulation: Nylon
- Terminal Body: Brass
- Plating: Tin

CE RoHS

| ITEM NO . | DIMENSION mm | | | | | | | | PCS/ PACK | COLOR | EXPLANATION |
|---|---|---|---|---|---|---|---|---|---|---|---|
| | W | W1 | F | L | H | d1 | D | T | | | |
| MPFNY1.25-156 | 4.0 | 7.4 | 9.0 | 27.0 | 10.0 | 1.7 | 4.0 | 0.4 | 100 | Red | Wire range : 0.5-1.5mm$^2$<br>A. W. G : ( 22-16 )<br>Max.current=10A |
| MPFNY2-156 | 4.0 | 8.6 | 9.0 | 27.0 | 10.0 | 2.3 | 5.0 | 0.4 | 100 | Blue | Wire range : 1.5-2.5mm$^2$<br>A. W. G : ( 16-14 )<br>Max.current=15A |

## Nylon-Insulated Bullet-male Quick Disconnects

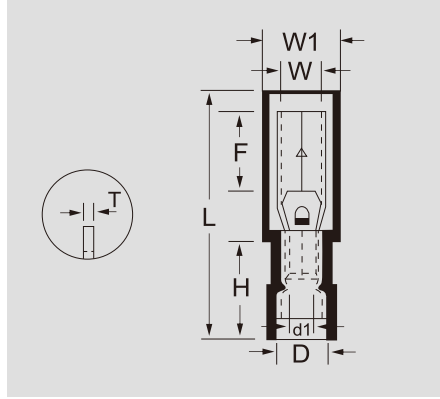


- Maximum electrical rating: 105℃, 300V
- Insulation: Nylon
- Terminal Body: Brass
- Plating: Tin

CE RoHS

| ITEM NO . | DIMENSION mm | | | | | | | | PCS/ PACK | COLOR | EXPLANATION |
|---|---|---|---|---|---|---|---|---|---|---|---|
| | W | W1 | F | L | H | d1 | D | T | | | |
| FRFNY1.25-156 | 3.9 | 6.9 | 9 | 25.2 | 11.0 | 1.7 | 4.0 | 0.4 | 100 | Red | Wire range : 0.5-1.5mm$^2$<br>A. W. G : ( 22-16 )<br>Max.current=10A |
| FRFNY2-156 | 3.9 | 7.9 | 9 | 25.2 | 11.0 | 2.3 | 5.0 | 0.4 | 100 | Blue | Wire range : 1.5-2.5mm$^2$<br>A. W. G : ( 16-14 )<br>Max.current=15A |

## Nylon-Fully Insulated Female Quick Disconnects

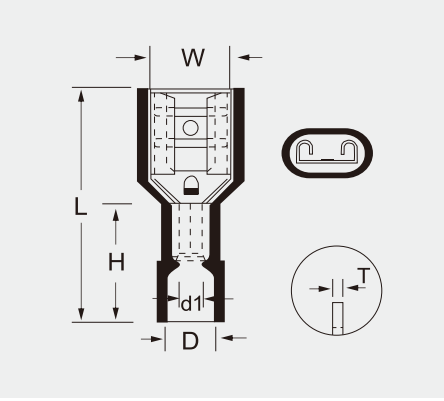


- Maximum electrical rating: 105℃, 300V
- Insulation: Nylon
- Terminal Body: Brass
- Plating: Tin

CE RoHS

| ITEM NO . | Nema Tab | DIMENSION mm | | | | | | PCS/ PACK | COLOR | EXPLANATION |
|---|---|---|---|---|---|---|---|---|---|---|
| | | W | L | H | d1 | D | T | | | |
| FDFN1.25-187(5) | 0.5×4.75 | 5.8 | 20.2 | 11.0 | 1.7 | 4.0 | 0.35 | 100 | Red | Wire range : 0.5-1.5mm² A. W. G : ( 22-16 ) Max.current=10A |
| FDFN1.25-187(8) | 0.8×4.75 | | | | | | | | | |
| FDFN1.25-250 | 0.8×6.35 | 7.5 | 22.0 | 11.0 | 1.7 | 4.0 | 0.4 | | | |
| FDFN2-187(5) | 0.5×4.75 | 5.8 | 20.2 | 11.0 | 2.3 | 4.5 | 0.35 | 100 | Blue | Wire range : 1.5-2.5mm² A. W. G : ( 16-14 ) Max.current=15A |
| FDFN2-187(8) | 0.8×4.75 | | | | | | | | | |
| FDFN2-250 | 0.8×6.35 | 7.5 | 22.0 | 11.0 | 2.3 | 4.5 | 0.4 | | | |
| FDFN5.5-250 | 0.8×6.35 | 7.5 | 24.0 | 13.0 | 3.4 | 6.3 | 0.4 | 100 | Yellow | Wire range : 4-6mm² A. W. G : ( 12-10 ) Max.current=24A |

## Nylon-Fully Insulated Male Quick Disconnects

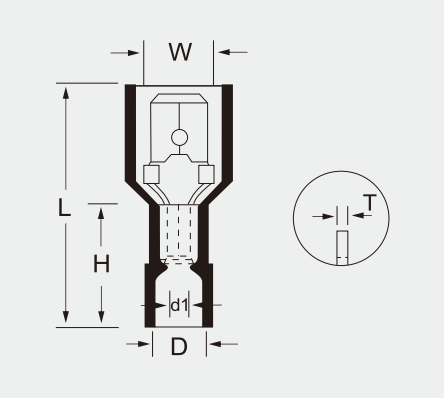


- Maximum electrical rating: 105℃, 300V
- Insulation: Nylon
- Terminal Body: Brass
- Plating: Tin

CE RoHS

| ITEM NO . | Nema Tab | DIMENSION mm | | | | | | PCS/ PACK | COLOR | EXPLANATION |
|---|---|---|---|---|---|---|---|---|---|---|
| | | W | L | H | d1 | D | T | | | |
| MDFN1.25-250 | 0.8×6.35 | 6.35 | 24.0 | 11.0 | 1.7 | 4.0 | 0.8 | 100 | Red | Wire range : 0.5-1.5mm² A. W. G : ( 22-16 ) Max.current=10A |
| MDFN2-250 | 0.8×6.35 | 6.35 | 24.0 | 11.0 | 2.3 | 4.5 | 0.8 | 100 | Blue | Wire range : 1.5-2.5mm² A. W. G : ( 16-14 ) Max.current=15A |
| MDFN5.5-250 | 0.8×6.35 | 6.35 | 25.0 | 13.0 | 3.4 | 6.3 | 0.4 | 100 | Yellow | Wire range : 4-6mm² A. W. G : ( 12-10 ) Max.current=24A |

D

## Nylon-Fully Insulated Female Quick Disconnects

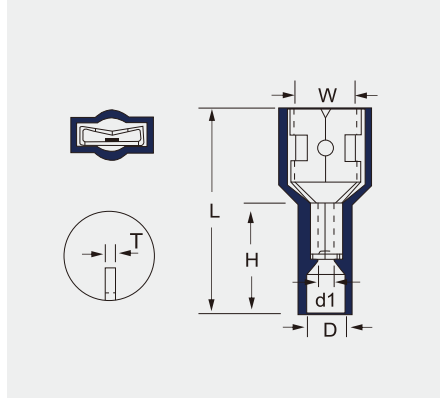


- Maximum electrical rating: 105℃, 300V
- Insulation: Nylon
- Terminal Body: Brass
- Plating: Tin

CE SGS RoHS

| ITEM NO . | Nema Tab | DIMENSION mm | | | | | | PCS/ PACK | COLOR | EXPLANATION |
|---|---|---|---|---|---|---|---|---|---|---|
| | | W | L | H | d1 | D | T | | | |
| FDFNY1.25-250 | 0.8×6.35 | 6.6 | 22.0 | 11.0 | 1.7 | 4.0 | 0.4 | 100 | Red | Wire range : 0.5-1.5mm² A. W. G : ( 22-16 ) Max.current=10A |
| FDFNY2-250 | 0.8×6.35 | 6.6 | 22.0 | 11.0 | 2.3 | 4.5 | 0.4 | 100 | Blue | Wire range : 1.5-2.5mm² A. W. G : ( 16-14 ) Max.current=15A |
| FDFNY5.5-250 | 0.8×6.35 | 6.6 | 24.5 | 12.0 | 3.4 | 5.5 | 0.4 | 100 | Yellow | Wire range : 4-6mm² A. W. G : ( 12-10 ) Max.current=24A |

## Nylon-Fully Insulated Male Quick Disconnects

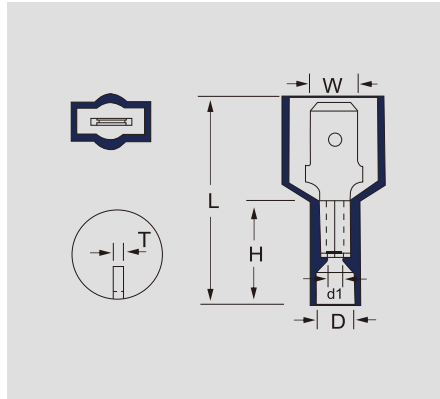


- Maximum electrical rating: 105℃, 300V
- Insulation: Nylon
- Terminal Body: Brass
- Plating: Tin

CE SGS RoHS

| ITEM NO . | Nema Tab | DIMENSION mm | | | | | | PCS/ PACK | COLOR | EXPLANATION |
|---|---|---|---|---|---|---|---|---|---|---|
| | | W | L | H | d1 | D | T | | | |
| MDFNY1.25-250 | 0.8×6.35 | 6.35 | 24.5 | 11.0 | 1.7 | 4.0 | 0.8 | 100 | Red | Wire range : 0.5-1.5mm² A. W. G : ( 22-16 ) Max.current=10A |
| MDFNY2-250 | 0.8×6.35 | 6.35 | 24.5 | 11.0 | 2.3 | 4.5 | 0.8 | 100 | Blue | Wire range : 1.5-2.5mm² A. W. G : ( 16-14 ) Max.current=15A |
| MDFNY5.5-250 | 0.8×6.35 | 6.35 | 26.0 | 13.0 | 3.4 | 5.5 | 0.8 | 100 | Yellow | Wire range : 4-6mm² A. W. G : ( 12-10 ) Max.current=24A |

## Nylon- Insulated Flange Female Quick Disconnects

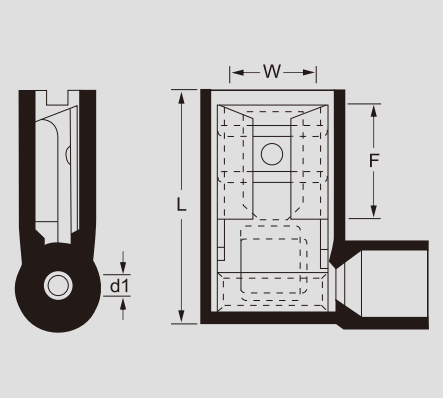


- Maximum electrical rating: 105℃, 300V
- Insulation: Nylon
- Terminal Body: Brass
- Plating: Tin

CE SGS RoHS

| ITEM NO . | Nema Tab | DIMENSION mm | | | | | PCS/ PACK | COLOR | EXPLANATION |
|---|---|---|---|---|---|---|---|---|---|
| | | W | F | L | d1 | T | | | |
| FLDNY1.25-250 | 0.8×6.35 | 7.5 | 8.4 | 16 | 1.7 | 0.5 | 100 | Red | Wire range : 0.5-1.0mm² A. W. G : ( 22-18 ) Max.current=10A |
| FLDNY2-250 | 0.8×6.35 | 7.5 | 8.4 | 16 | 2.3 | 0.5 | 100 | Blue | Wire range : 1.5-2.5mm² A. W. G : ( 16-14 ) Max.current=15A |
| FLDNYD5.5-250 | 0.8×6.35 | 7.5 | 7.3 | 18 | 3.4 | 0.4 | 100 | Yellow | Wire range : 4-6mm² A. W. G : ( 12-10 ) Max.current=24A |

## Nylon- Insulated Bullet Female Quick Disconnects

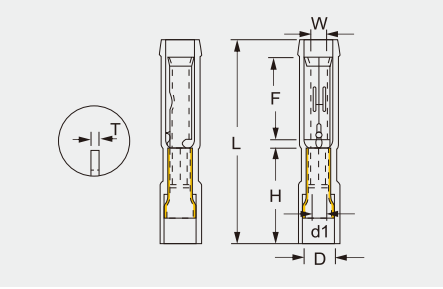


- Maximum electrical rating: 105℃, 300V
- Insulation: Nylon
- Terminal Body: Brass
- Metallic Sleeve: Copper
- Plating: Tin

CE SGS RoHS

| ITEM NO . | DIMENSION mm | | | | | | | PCS/ PACK | COLOR | EXPLANATION |
|---|---|---|---|---|---|---|---|---|---|---|
| | W | L | F | H | d1 | D | T | | | |
| FRFNYD0.5-078 | 2.05 | 24.8 | 10.0 | 11.0 | 1.6 | 3.5 | 0.3 | 100 | White | Wire range : 0.5-0.75mm² Max.current=10A |

## Nylon- Insulated Bullet Male Quick Disconnects

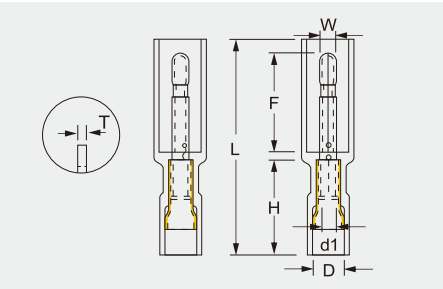


- Maximum electrical rating: 105℃, 300V
- Insulation: Nylon
- Terminal Body: Brass
- Metallic Sleeve: Copper
- Plating: Tin

CE SGS RoHS

| ITEM NO . | DIMENSION mm | | | | | | | PCS/ PACK | COLOR | EXPLANATION |
|---|---|---|---|---|---|---|---|---|---|---|
| | W | L | F | H | d1 | D | T | | | |
| FRFNYD0.5-078 | 2.0 | 27.0 | 12.0 | 11.0 | 1.6 | 3.5 | 0.3 | 100 | White | Wire range : 0.5-0.75mm² Max.current=10A |

D

# 中接管及其它連接器
# Butt Splice & other Connectors

www.cnhowder.com

## Vinyl-Insulated Butt Splice Connectors

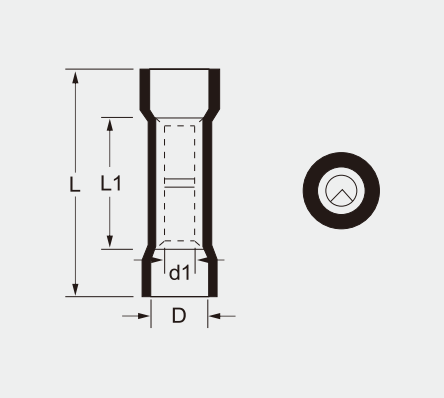


- Maximum electrical rating: 75℃, 600V
- Insulation: Vinyl
- Terminal Body: Copper
- Plating: Tin

CE RoHS

| ITEM NO. | DIMENSION mm | | | | Imax | WIRE RANGE | | PCS/ PACK | COLOR | EXPLANATION |
|---|---|---|---|---|---|---|---|---|---|---|
| | L | L1 | D | d1 | | A. W. G | mm² | | | |
| BV 1.25 | 24.6 | 15.0 | 4.2 | 2.15 | 19A | 22-16 | 0.5-1.5 | 100 | Red | Wire range: 0.5~1.5mm² A.W.G = 22-16 |
| BV 2 | 24.6 | 15.0 | 4.7 | 2.75 | 27A | 16-14 | 1.5-2.5 | 100 | Blue | Wire range: 1.5~2.5mm² A.W.G = 16-14 |
| BV 5.5 | 26.0 | 15.0 | 6.3 | 4.25 | 48A | 10-12 | 4-6 | 100 | Yellow | Wire range: 4~6mm² A.W.G = 12-10 |
| BV 8 | 35.0 | 21.0 | 8.5 | 5 | 62A | 8 (8) | 6-10 | 100 | Red | Wire range: 8mm² A.W.G = 8 |
| BV 14 | 45.0 | 26.0 | 10.5 | 6.6 | 88A | 14 (6) | 10-16 | 50 | Blue | Wire range: 14mm² A.W.G = 6 |
| BV 22 | 52.0 | 29.0 | 12.5 | 8.0 | 115A | 22 (4) | 16-25 | 50 | Yellow | Wire range: 22mm² A.W.G = 4 |
| BV 38 | 55.0 | 32.0 | 15.5 | 10.0 | 160A | 38 (2) | 25-35 | 50 | Red | Wire range: 38mm² A.W.G = 2 |

E

## Vinyl-Insulated Parallel Splice Connectors

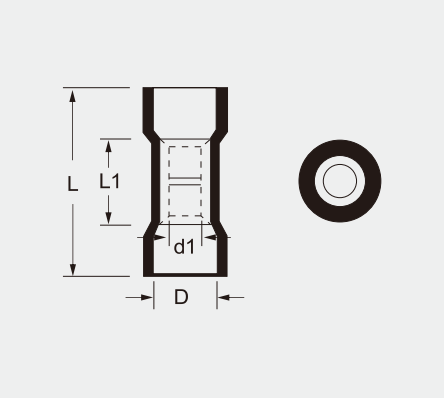


- Maximum electrical rating: 75℃, 600V
- Insulation: Vinyl
- Terminal Body: Copper
- Plating: Tin

CE RoHS

| ITEM NO. | DIMENSION mm | | | | Imax | WIRE RANGE | | PCS/ PACK | COLOR | EXPLANATION |
|---|---|---|---|---|---|---|---|---|---|---|
| | L | L1 | D | d1 | | A. W. G | mm² | | | |
| PVT 1.25 | 16.0 | 8.0 | 4.3 | 2.3 | 19A | 22-16 | 0.5-1.5 | 100 | Red | Wire range: 0.5~1.5mm² A.W.G = 22-16 |
| PVT2 | 16.0 | 8.0 | 5.0 | 2.95 | 27A | 16-14 | 1.5-2.5 | 100 | Blue | Wire range: 1.5~2.5mm² A.W.G = 16-14 |
| PVT5.5 | 20.5 | 8.5 | 6.3 | 4.45 | 48A | 10-12 | 4-6 | 100 | Yellow | Wire range: 4~6mm² A.W.G = 12-10 |

E

## Nylon-Insulated Butt Splice Connectors

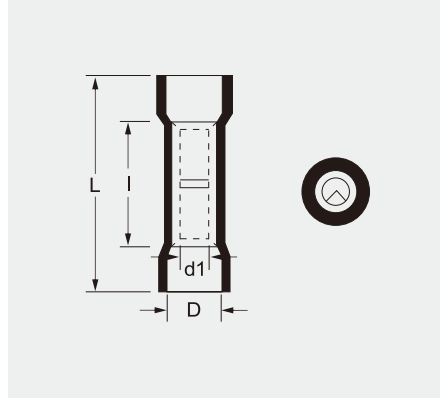


- Maximum electrical rating: 105℃, 600V
- Insulation: Nylon
- Terminal Body: Copper
- Plating: Tin

CE SGS RoHS

| ITEM NO . | DIMENSION mm | | | | Imax | WIRE RANGE | | PCS/ PACK | COLOR | EXPLANATION |
|---|---|---|---|---|---|---|---|---|---|---|
| | L | D | d1 | L1 | | A. W. G | mm² | | | |
| BNYF 1.25 | 25.2 | 4.0 | 2.15 | 15.0 | 19A | 22-16 | 0.5-1.5 | 100 | Red | Wire range: 0.5~1.5mm² A.W.G = 22-16 |
| BNYF 2 | 25.2 | 4.5 | 2.75 | 15.0 | 27A | 16-14 | 1.5-2.5 | 100 | Blue | Wire range: 1.5~2.5mm² A.W.G = 16-14 |
| BNYF 5.5 | 28.0 | 6.3 | 4.25 | 15.0 | 48A | 12-10 | 4-6 | 100 | Yellow | Wire range: 4~6mm² A.W.G = 12-10 |

## Insula Ted Hea T Shrinkable Butt Connectors

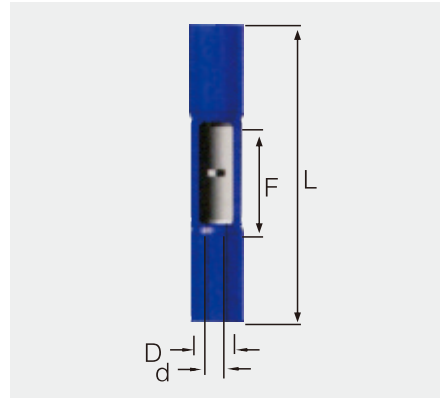


- Maximum Electrical Rating : 600 Volts
- Shrink Temp 150 ℃
  Operating Temp −10℃~105℃
- Terminal Material: Copper tube
- Plating: Electro Tin Plated
- Insulated Material : Heat Shrinkable Tube

CE SGS RoHS

| ITEM NO. | WIRE RANGE AWG/mm² | DIMENSIONS inch(mm) | | | | INSULATED COLOR |
|---|---|---|---|---|---|---|
| | | F | L | D | d | |
| BHT0.5 | 26~22 AWG 0.2-0.5 mm² | 12.0 | 24.0 | 2.1 | 1.2 | TRANSPARENT |
| BHT1.25 | 22~16 AWG 0.5~1.5 mm² | 15.0 | 37.0 | 4.5 | 1.6 | RED |
| BHT2 | 16-14 AWG 1.5-2.5 mm² | | | 5.5 | 2.3 | BLUE |
| BHT5.5 | 12 ~10 AWG 4 ~6 mm² | | 41.0 | 6.5 | 3.6 | YELLOW |

## HD-SST-100 Single ring environment friendly solder ring

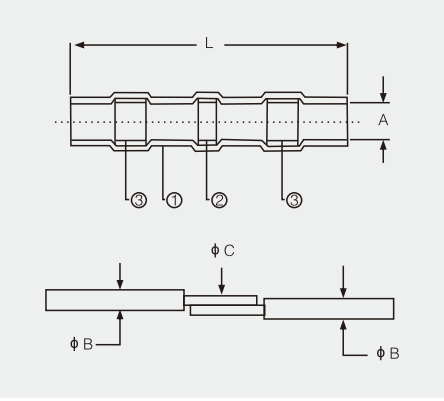


- Contraction ratio 2:1
- The hot-melt adhesive strip has the function of waterproof
- High transparent heat shrinkable casing
- Simple operation
- Minimum systolic temperature: 60 degrees centigrade
- Minimum complete contraction temperature: 150℃
- Complete dissolving temperature of tin ring: 138℃

CE RoHS

| PRODUCT NUMBER | Ring color | L(mm) | Number of tin rings | ϕA Minimum inner diameter (mm) | Line number (mm) | | | Gauge AWG ($mm^2$) |
|---|---|---|---|---|---|---|---|---|
| | | | | | B Minimum diameter | B maximum diameter C maximum diameter | C Minimum diameter | |
| HD-SST-100-01 | ○ | 26 | 1 | 1. 7 | 0. 4 | 1. 7 | 0. 76 | 26-24(0. 25-0. 5) |
| HD-SST-100-02 | ● | 40 | 1 | 2. 7 | 1. 3 | 2. 7 | 1. 2 | 22-18(0. 5-1. 5) |
| HD-SST-100-03 | ● | 40 | 1 | 4. 5 | 1. 8 | 4. 5 | 2. 0 | 16-14(1. 5-2. 5) |
| HD-SST-100-04 | ● | 40 | 1 | 6. 0 | 2. 8 | 6. 0 | 3. 4 | 12-10(4. 0-6. 0) |

## HD-SST-SGRS-00 Environment-friendly solder seal cap

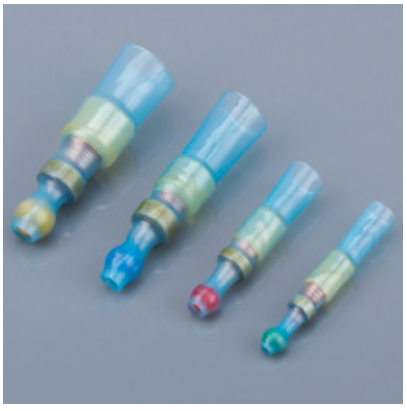

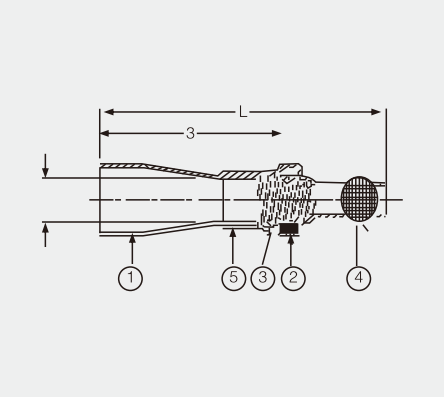


- Contraction ratio 2:1
- The hot-melt adhesive strip has the function of waterproof
- Heat resistant PVDF heat shrinkable tube
- Simple operation
- Minimum systolic temperature: 60 degrees centigrade
- Minimum complete contraction temperature: 150℃
- Complete dissolving temperature of tin ring: 138℃

CE RoHS

| PRODUCT NUMBER | Ring color | Product size | | | Copper wire part | | Tin exchange |
|---|---|---|---|---|---|---|---|
| | | ϕA | L(mm) | B | Minimum inner diameter $mm^2$ | Maximum inner diameter $mm^2$ | |
| HD-SST-SGRS-00-01 | ● | 3.6 | 38 | 26 | 0. 7 | 2. 4 | 1 |
| HD-SST-SGRS-00-02 | ● | 5.0 | 38 | 26 | 2. 0 | 4. 0 | 2 |
| HD-SST-SGRS-00-03 | ● | 7.5 | 45 | 30 | 3. 5 | 8. 0 | 2 |
| HD-SST-SGRS-00-04 | ● | 9.4 | 45 | 30 | 7. 5 | 12. 0 | 3 |

## Quick Splice Connectors

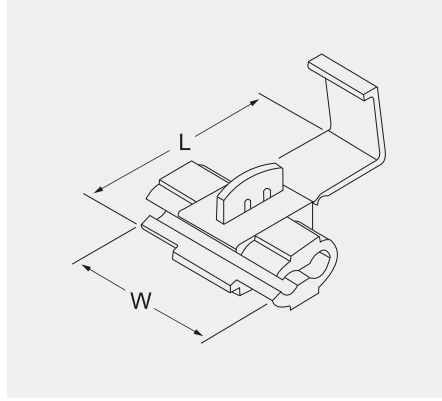


- Maximum electrical rating: 105℃, 600V
- Insulation: P.P.
- Terminal Body: Brass
- Plating: Tin

CE SGS RoHS

| ITEM NO . | WIRE RANGE AWG/mm² | DIMENSION mm | | PCS/ PACK | COLOR | EXPLANATION |
|---|---|---|---|---|---|---|
| | | W | L | | | |
| 878100 | 22~18AWG 0.5~0.75mm² | .787 20 | 1.063 27 | 50 | Red | Material : PP |
| 878101 | 18~14AWG 0.75~2.5mm² | .787 20 | 1.063 27 | 50 | Blue | Material : PP |
| 878101-WHITE | | .787 20 | 1.063 27 | 50 | whith | Material : PP |
| 878201 | 12~10AWG 4~6mm² | .807 20.5 | 1.358 34.5 | 50 | Yellow | Material : PP |

E

## Quick Splice Connectors

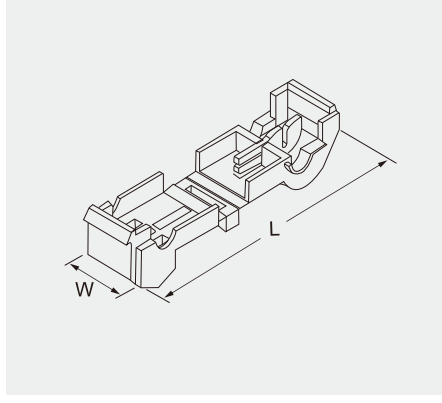


- Maximum Electrical Rating: 105℃ 600 Volts
- Insulation Material: Nylon
- Terminal Material: Copper

CE SGS RoHS

| ITEM NO . | WIRE RANGE AWG/mm² | SUGGESTED MATE WITH MALE TAB (THICKNESS X WIDTH) | DIMENSION mm | | PCS/ PACK | COLOR | EXPLANATION |
|---|---|---|---|---|---|---|---|
| | | | W | L | | | |
| 878006 | 22~18AWG 0.5~0.75mm² | MDFNY1-250 (.032×. 250) | 0.386 9.8 | 1.457 37 | 50 | Red | |
| 878106 | 18~14AWG 0.75~2.5mm² | MDFNY2-250 (.032×. 250) | 0.386 9.8 | 1.457 37 | 50 | Blue | |
| 878206 | 12~10AWG 4mm² | MDFNY5-250 (.032×. 250) | 0.386 9.8 | 1.457 37 | 50 | Yellow | |

## Screw On Wire Connectors

- Voltage:300V, 600V
- Temperature:105℃
- Material:PVC plastic rubber material
- Intemational Certification: UL, CSA Security Certification
- Function: Suitable for electrical products, light utensilsm,which needs high temperature testing(105),with high insulation performance.

CE SGS RoHS

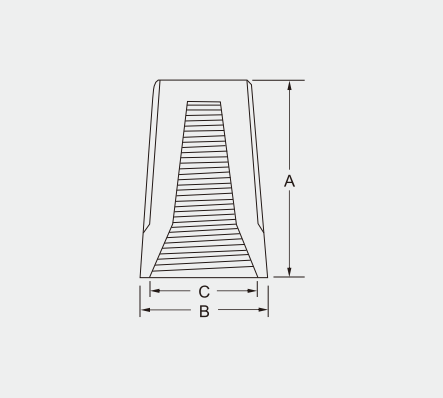


| ITEM NO . | A mm | B mm | C mm | SUITABLE WIRES A.W.G | COLOR | PACK/BAG |
|---|---|---|---|---|---|---|
| P1 | 15.2 | 8.6 | 6.7 | 22-14 | Grey | 100 |
| P2 | 17.6 | 9.8 | 7.4 | 22-14 | Blue | |
| P3 | 22.0 | 12 | 9.9 | 22-14 | Orange | 100 |
| P4 | 24.5 | 14 | 11 | 22-10 | Yellow | |
| P6 | 26.5 | 16.4 | 13 | 22-8 | Red | |

## Doublke Wings Screw On Wire Connectors

- **Material:** UL nylon66, with spring inside.
- **Usage:** peel wire coat, insert the wire in, then tighten.

CE SGS RoHS

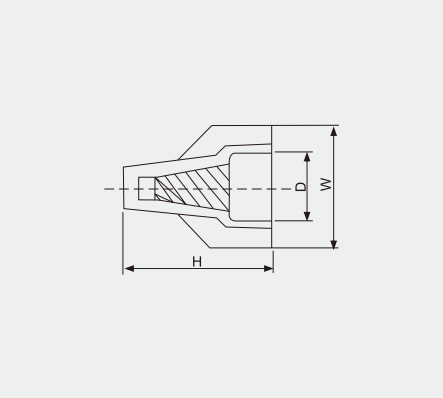


| ITEM NO . | HEIGHT(MM) | WIDTH(MM) | D(MM) | SUITABLE WIRE | COLOR |
|---|---|---|---|---|---|
| P11 | 25.4 | 18 | 9.5 | 0.5-2.5mm$^2$(AWG22-14) | Yellow |
| P12 | 27.7 | 17.8 | 10 | 0.5-4mm$^2$(AWG22-12) | Taupe |
| P13 | 30.5 | 23.1 | 12 | 1.0-6mm$^2$(AWG18-10) | Red |
| P15 | 32.6 | 25.5 | 14.6 | 1.0-10mm$^2$(AWG18-8) | Grey |
| P17 | 39.5 | 31.7 | 17.8 | 2.5-16mm$^2$(AWG14-6) | Blue |

E

## Closed End Wire Connectors

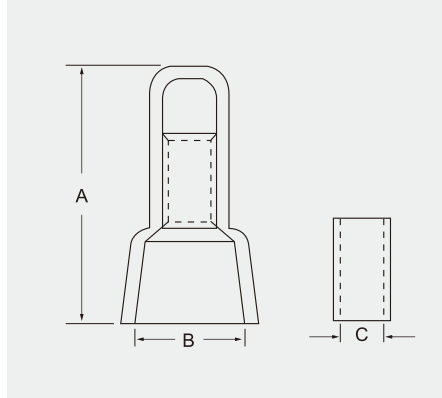


- Maximum Electrical Rating: 105℃ 600 Volts
- Insulation: Nylon
- Terminal Body: Copper
- Plating: Tin

CE RoHS

| ITEM NO . | A mm | B mm | C mm | SUITABLE WIRES | | SUITABLE CRIMPING TOOLS | PACK/BAG |
|---|---|---|---|---|---|---|---|
| | | | | $mm^2$ | A.W.G | | |
| CE-1 | 18 | 6.2 | 2.6 | 1.25 | 22-18 | AK-25<br>MR-30A<br>IZUM1#7A<br>IZUM1<br>AC-5ND | 100 |
| CE-2 | 19.7 | 7.9 | 3 | 2 | 22-14 | | |
| CE-5 | 25.5 | 10.5 | 4 | 5.5 | 22-10 | | |
| CE-8 | 27.7 | 12.4 | 5.3 | 8 | 16-10 | AK-28 | |

## Terminal Sleeve For Terminals & Tubularlugs

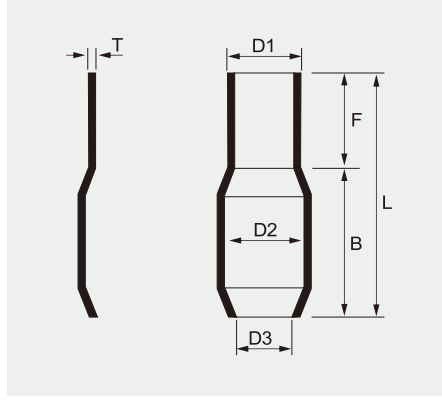


- Material: VINYL

CE RoHS

| ITEM NO . | DIMENSION mm | | | | | | | PCS/ PACK | EXPLANATION |
|---|---|---|---|---|---|---|---|---|---|
| | D1 | D2 | D3 | L | F | B | T | | |
| V 1.25 | 2.8 | 3.3 | 3.1 | 13.0 | 6.0 | 7.0 | 0.6 | 1000 | Material : PVC |
| V 2 | 3.3 | 4.5 | 3.7 | 14.0 | 7.0 | 7.0 | 0.7 | 1000 | |
| V 3.5 | 4.2 | 5.7 | 4.1 | 17.0 | 9.0 | 8.0 | 0.8 | 1000 | |
| V 5.5 | 4.8 | 5.7 | 5.2 | 17.0 | 9.0 | 8.0 | 0.8 | 500 | |
| V 8 | 6.2 | 7.2 | 6.2 | 19.0 | 10.0 | 9.0 | 1.0 | 500 | |
| V 14 | 7.5 | 10.0 | 8.0 | 25.0 | 14.0 | 11.0 | 1.1 | 200 | |
| V 22 | 10.5 | 12.0 | 9.5 | 30.0 | 15.0 | 15.0 | 1.2 | 200 | |
| V 38 | 12.5 | 14.0 | 11.8 | 34.0 | 17.5 | 16.5 | 1.5 | 100 | |
| V 60 | 15.0 | 16.8 | 13.5 | 39.0 | 20.0 | 19.0 | 1.5 | 100 | |
| V 70 | 16.0 | 17.5 | 14.5 | 43.0 | 22.0 | 20.0 | 1.5 | 50 | |
| V 80 | 17.0 | 19.0 | 16.0 | 47.0 | 25.0 | 22.0 | 1.5 | 50 | |
| V 100 | 19.0 | 22.0 | 18.0 | 54.0 | 30.0 | 24.0 | 1.6 | 50 | |
| V 150 | 23.0 | 24.5 | 22.0 | 65.0 | 35.0 | 30.0 | 1.8 | 25 | |
| V 200 | 27.0 | 32.0 | 24.0 | 65.0 | 35.0 | 30.0 | 2.0 | 20 | |
| V 325 | 29.0 | 38.0 | 29.0 | 77.0 | 37.0 | 40.0 | 2.5 | 20 | |

# Non-Insulated
# Butt Splice Connectors

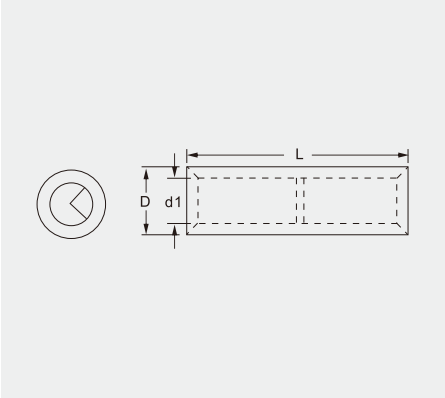


- Terminal Body: Copper
- Plating: Tin

CE RoHS

| ITEM NO . | DIMENSION mm | | | | PCS/ PACK |
|---|---|---|---|---|---|
| | D | d | L | T | |
| BNT1.25 | 3.35 | 2.15 | 15.0 | 0.6 | 100 |
| BNT2 | 3.95 | 2.75 | 15.0 | 0.6 | 100 |
| BNT3.5 | 5.0 | 3.8 | 15.0 | 0.6 | 100 |
| BNT5.5 | 5.45 | 4.25 | 15.0 | 0.6 | 100 |
| BNT8 | 7 | 5 | 21.0 | 1.0 | 100 |
| BNT14 | 9 | 6.6 | 26.0 | 1.2 | 100 |
| BNT22 | 11.0 | 8 | 29.0 | 1.5 | 250 |
| BNT38 | 13.0 | 10 | 32.0 | 1.5 | 50 |
| BNT60 | 15.3 | 11.4 | 36.0 | 1.95 | 50 |
| BNT70 | 17.5 | 13.3 | 37.0 | 2.1 | 50 |
| BNT80 | 19.5 | 14.5 | 38.0 | 2.5 | 50 |
| BNT100 | 22.0 | 16.4 | 38.0 | 2.8 | 20 |
| BNT150 | 26.5 | 19.5 | 54.0 | 3.5 | 20 |
| BNT180 | 28.5 | 21 | 57.0 | 3.75 | 10 |
| BNT200 | 32.5 | 24 | 63.0 | 4.2 | 10 |
| BNT325 | 37 | 28 | 72.0 | 4.5 | 5 |

## Non-Insulated
## Parallel Splice Connectors

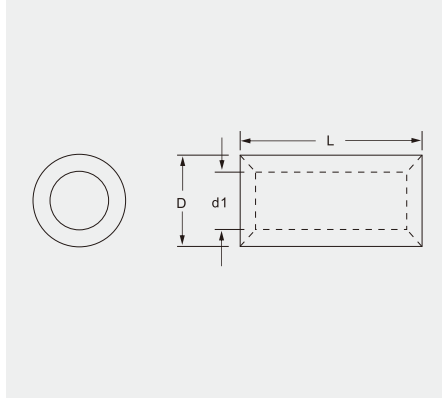


- Terminal Body: Copper
- Plating: Tin

CE SGS RoHS

| ITEM NO . | DIMENSION mm | | | | PCS/ PACK |
|---|---|---|---|---|---|
| | L | D | d1 | T | |
| PNT 1 | 8.0 | 3.35 | 2.15 | 0.6 | 100 |
| PNT 2 | 8.0 | 3.95 | 2.75 | 0.6 | 100 |
| PNT 5 | 8.5 | 5.45 | 4.25 | 0.6 | 100 |
| PNT 8 | 9.5 | 7.0 | 5.0 | 1.0 | 100 |
| PNT 14 | 11.0 | 9.0 | 6.6 | 1.2 | 100 |
| PNT 22 | 13.5 | 11.0 | 8.0 | 1.5 | 50 |
| PNT 38 | 16.5 | 13.0 | 10.0 | 1.5 | 50 |
| PNT 60 | 19.0 | 15.3 | 11.4 | 1.95 | 50 |
| PNT 70 | 19.0 | 17.5 | 13.3 | 2.1 | 50 |
| PNT 80 | 19.5 | 19.5 | 14.5 | 2.5 | 50 |
| PNT 100 | 20.0 | 22.0 | 16.4 | 2.8 | 20 |
| PNT 150 | 27.0 | 26.5 | 19.5 | 3.5 | 20 |
| PNT 180 | 28.5 | 28.5 | 21.0 | 3.75 | 10 |
| PNT 200 | 32.0 | 32.5 | 24.0 | 4.20 | 10 |
| PNT 325 | 37.0 | 37.0 | 28.0 | 4.50 | 5 |

# 歐式管形端子
# Cord End Terminals

www.cnhowder.com

## Vinyl-Insulated Cord End Terminals

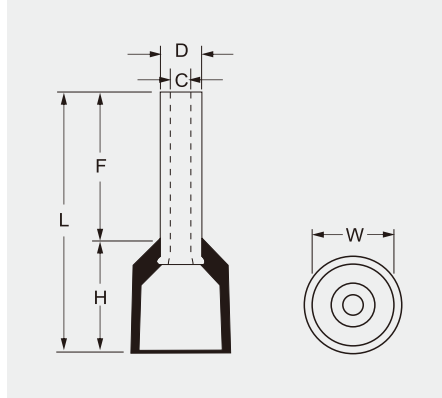


- Maximum electrical rating: 75℃, 600V
- Insulation: Vinyl
- Terminal Body: Copper
- Plating: Tin

CE SGS RoHS

F

| ITEM NO . | DIMENSION mm | | | | | | PCS/ PACK | STANDARD COLOR | SELECTED COLOR |
|---|---|---|---|---|---|---|---|---|---|
| | F | L | W | H | D | C | | | |
| E0506 | 6.0 | 12.0 | 2.6 | 6.0 | 1.3 | 1.0 | 1000 | Orange White | R, B, Y, BK, G, GY, W, O |
| E0508 | 8.0 | 14.0 | | | | | | | |
| E0510 | 10.0 | 16.0 | | | | | | | |
| E0512 | 12.0 | 18.0 | | | | | | | |
| E7506 | 6.0 | 12.3 | 2.8 | 6.3 | 1.5 | 1.2 | 1000 | White Blue | |
| E7508 | 8.0 | 14.3 | | | | | | | |
| E7510 | 10.0 | 16.3 | 2.8 | 6.3 | | | | | |
| E7512 | 12.0 | 18.3 | | | | | | | |
| E7518 | 18.0 | 24.3 | | | | | | | |
| E1006 | 6.0 | 12.3 | 3.0 | 6.3 | 1.7 | 1.4 | 1000 | Yellow Red | |
| E1008 | 8.0 | 14.6 | | | | | | | |
| E1010 | 10.0 | 16.3 | 3.0 | 6.3 | | | | | |
| E1012 | 12.0 | 18.3 | | | | | | | |
| E1018 | 18.0 | 24.3 | 3.0 | 6.3 | | | | | |
| E1508 | 8.0 | 14.3 | 3.5 | 6.3 | 2.0 | 1.7 | 1000 | Red Black | |
| E1510 | 10.0 | 16.36 | 3.5 | 6.3 | | | | | |
| E1512 | 12.0 | 18.3 | | | | | | | |
| E1518 | 18.0 | 24.3 | | | | | | | |
| E2508 | 8.0 | 15.4 | 4.0 | 7.4 | 2.6 | 2.3 | 1000 | Blue Gray | |
| E2510 | 10.0 | 17.4 | | | | | | | |
| E2512 | 12.0 | 19.4 | | | | | | | |
| E2518 | 18.0 | 25.4 | | | | | | | |
| E4009 | 9.0 | 16.4 | 4.5 | 7.4 | 3.2 | 2.8 | 1000 | Gray Orange | |
| E4010 | 10.0 | 17.4 | | | | | | | |
| E4012 | 12.0 | 19.4 | | | | | | | |
| E4018 | 18.0 | 25.4 | | | | | | | |

## Vinyl-Insulated Cord End Terminals

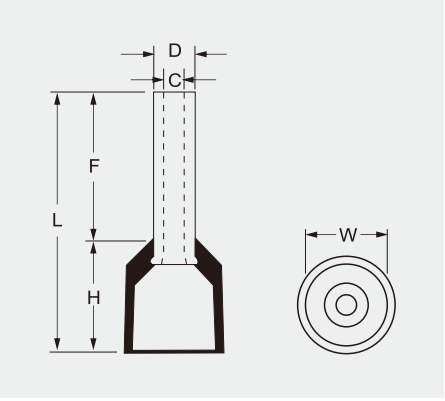


- Maximum electrical rating: 75℃, 600V
- Insulation: Vinyl
- Terminal Body: Copper
- Plating: Tin

CE SGS RoHS

| ITEM NO . | DIMENSION mm | | | | | | PCS/ PACK | STANDARD COLOR | SELECTED COLOR |
|---|---|---|---|---|---|---|---|---|---|
| | F | L | W | H | D | C | | | |
| E6012 | 12.0 | 20.5 | 6.0 | 8.5 | 3.9 | 3.5 | 1000 | Black Green | R<br>B<br>Y<br>BK<br>G<br>GY<br>W<br>O |
| E6018 | 18.0 | 26.5 | | | | | | | |
| E10-12 | 12.0 | 20.8 | 7.5 | 8.8 | 4.9 | 4.5 | 500 | Milk Brown | |
| E10-18 | 18.0 | 26.8 | | | | | | | |
| E16-12 | 12.0 | 22..0 | 8.7 | 10.0 | 6.2 | 5.8 | 500 | Green Milk | |
| E16-18 | 18.0 | 28.0 | | | | | | | |
| E25-12 | 12.0 | 24.0 | 11.0 | 12.0 | 7.9 | 7.5 | 250 | Brown Black | |
| E25-16 | 16.0 | 28.0 | | | | | | | |
| E25-18 | 18.0 | 30.0 | | | | | | | |
| E25-22 | 22.0 | 34.0 | | | | | | | |
| E35-16 | 16.0 | 30.0 | 12.5 | 14.0 | 8.7 | 8.3 | 250 | Gray | |
| E35-18 | 18.0 | 32.0 | | | | | | | |
| E35-22 | 22.0 | 36.0 | | | | | | | |
| E35-25 | 25.0 | 39.0 | | | | | | | |
| E50-12 | 12.0 | 28.0 | 15.0 | 16.0 | 10.9 | 10.3 | 250 | Olive | |
| E50-20 | 20.0 | 36.0 | | | | | | | |
| E50-25 | 25.0 | 41.0 | | | | | | | |
| E70-20 | 20.0 | 37.0 | 16.0 | 17.0 | 14.3 | 13.5 | 100 | | |
| E70-25 | 25.0 | 42.0 | | | | | | | |
| E95-25 | 25.0 | 44.0 | 18.5 | 19.0 | 15.6 | 14.8 | 100 | | |

## Twin Cord End Terminals

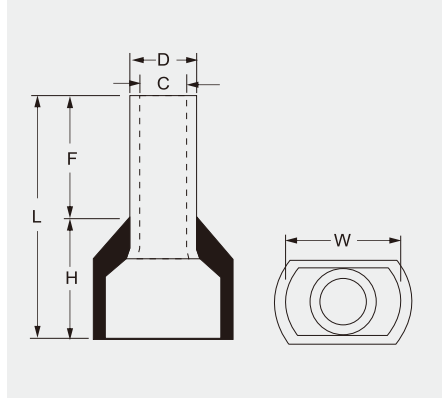


- Maximum electrical rating: 75℃, 600V
- Insulation: Vinyl
- Terminal Body: Copper
- Plating: Tin

CE RoHS

| ITEM NO . | DIMENSION mm | | | | | | PCS/ PACK | STANDARD COLOR | SELECTED COLOR |
|---|---|---|---|---|---|---|---|---|---|
| | F | L | W | H | D | C | | | |
| TE0508 | 8.0 | 14.5 | 5.0 | 6.5 | 1.8 | 1.5 | 1000 | White | R<br>B<br>Y<br>BK<br>G<br>GY<br>W<br>O |
| TE0510 | 10.0 | 16.5 | | | | | | | |
| TE7508 | 8.0 | 14.7 | 5.5 | 6.7 | 2.1 | 1.8 | 1000 | Blue Gray | |
| TE7510 | 10.0 | 16.7 | | | | | | | |
| TE1008 | 8.0 | 15.1 | 5.5 | 7.1 | 2.3 | 2.0 | 1000 | Red | |
| TE1010 | 10.0 | 17.1 | | | | | | | |
| TE1508 | 8.0 | 15.5 | 6.4 | 7.5 | 2.6 | 2.3 | 1000 | Black Yellow | |
| TE1512 | 12.0 | 19.5 | | | | | | | |
| TE2510 | 10.0 | 18.5 | 8.0 | 8.5 | 3.3 | 2.9 | 1000 | Gray Blue | |
| TE2513 | 13.0 | 21.5 | | | | | | | |
| TE4012 | 12.0 | 23.1 | 8.8 | 11.1 | 4.2 | 3.8 | 1000 | Orange Gray | |
| TE6014 | 14.0 | 26.1 | 9.5 | 12.1 | 5.3 | 4.9 | 500 | Green Yellow | |
| TE10-14 | 14.0 | 26.6 | 12.6 | 12.6 | 6.9 | 6.5 | 500 | Brown Red | |
| TE16-14 | 14.0 | 31.3 | 19.0 | 17.3 | 8.7 | 8.3 | 250 | Milk Blue | |

## Non-Insulated Cord End Terminals

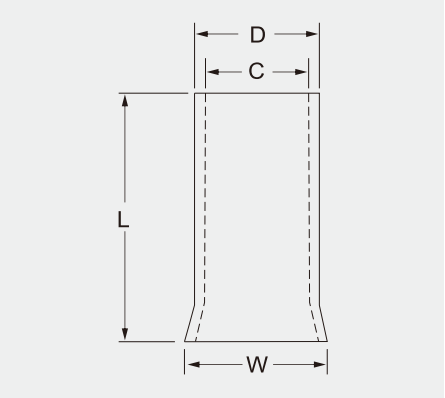


- Maximum electrical rating: 75℃, 600V
- Terminal Body: Copper
- Plating: Tin

CE RoHS

| ITEM NO . | DIMENSION mm | | | | PCS/PACK |
|---|---|---|---|---|---|
| | L | W | D | C | |
| EN0506 | 6.0 | 1.7 | 1.3 | 1.0 | 2000 |
| EN0508 | 8.0 | | | | |
| EN0510 | 10.0 | | | | |
| EN0512 | 12.0 | | | | |
| EN7506 | 6.0 | 1.9 | 1.5 | 1.2 | 2000 |
| EN7508 | 8.0 | | | | |
| EN7510 | 10.0 | | | | |
| EN7512 | 12.0 | | | | |
| EN1006 | 6.0 | 2.2 | 1.7 | 1.4 | 2000 |
| EN1008 | 8.0 | | | | |
| EN1010 | 10.0 | | | | |
| EN1012 | 12.0 | | | | |
| EN1018 | 18.0 | | | | |
| EN1508 | 8.0 | 2.5 | 2.0 | 1.7 | 2000 |
| EN1510 | 10.0 | | | | |
| EN1512 | 12.0 | | | | |
| EN1518 | 18.0 | | | | |
| EN2506 | 6.0 | 3.3 | 2.6 | 2.3 | 2000 |
| EN2508 | 8.0 | | | | |
| EN2510 | 10.0 | | | | |
| EN2512 | 12.0 | | | | |
| EN2518 | 18.0 | | | | |
| EN4009 | 9.0 | 3.9 | 3.2 | 2.8 | 1000 |
| EN4012 | 12.0 | | | | |
| EN4018 | 18.0 | | | | |
| EN6010 | 10.0 | 4.7 | 3.9 | 3.5 | 1000 |
| EN6012 | 12.0 | | | | |
| EN6018 | 18.0 | | | | |

## Non-Insulated Cord End Terminals

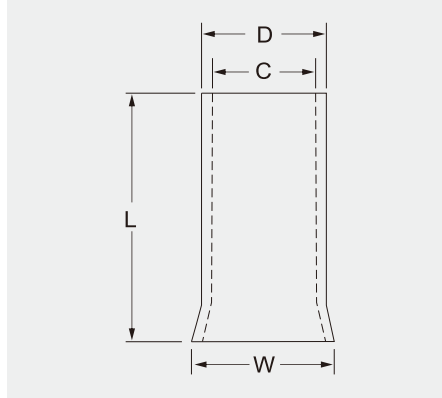


- Maximum electrical rating: 75℃, 600V
- Terminal Body: Copper
- Plating: Tin

CE SGS RoHS

| ITEM NO . | DIMENSION mm | | | | PCS/PACK |
|---|---|---|---|---|---|
| | L | W | D | C | |
| EN10-12 | 12.0 | 5.8 | 4.9 | 4.5 | 1000 |
| EN10-16 | 16.0 | | | | |
| EN10-18 | 18.0 | | | | |
| EN10-20 | 20.0 | | | | |
| EN10-25 | 25.0 | | | | |
| EN16-12 | 12.0 | 7.2 | 6.2 | 5.8 | 1000 |
| EN16-16 | 16.0 | | | | |
| EN16-18 | 18.0 | | | | |
| EN16-20 | 20.0 | | | | |
| EN16-22 | 22.0 | | | | |
| EN16-25 | 25.0 | | | | |
| EN25-12 | 12.0 | 9.1 | 7.9 | 7.5 | 500 |
| EN25-16 | 16.0 | | | | |
| EN25-18 | 18.0 | | | | |
| EN25-22 | 22.0 | | | | |
| EN25-25 | 25.0 | | | | |
| EN35-16 | 16.0 | 10.2 | 8.7 | 8.3 | 500 |
| EN35-20 | 20.0 | | | | |
| EN35-25 | 25.0 | | | | |
| EN50-12 | 12.0 | 12.7 | 10.9 | 10.3 | 500 |
| EN50-18 | 18.0 | | | | |
| EN50-22 | 22.0 | | | | |
| EN50-25 | 25.0 | | | | |
| EN70-22 | 22.0 | 15.8 | 14.3 | 13.5 | 200 |
| EN70-25 | 25.0 | | | | |
| EN70-32 | 32.0 | | | | |
| EN95-25 | 25.0 | 17.3 | 15.6 | 14.8 | 100 |

## 76PCS Insulated Terminal KIT

CE RoHS

| ITEM NO | HD-76 | | | | | |
|---|---|---|---|---|---|---|
| DETAIL | BV1.25 | 4 | BV2 | 4 | BV5.5 | 4 |
| | MDD1.25-250 | 4 | MDD2-250 | 4 | MDD5.5-250 | 4 |
| | FDD1.25-250 | 4 | FDD2-250 | 4 | FDD5.5-250 | 4 |
| | RV5.5-5 | 4 | RV2-3 | 4 | RV1.25-3 | 6 |
| | RV5.5-6 | 4 | RV2-4 | 4 | RV1.25-4 | 6 |
| | SV5.5-5 | 4 | SV2-4 | 4 | SV1.25-4 | 8 |
| PLASTIC BOX SIZE | 210X110X30MM | | | | | |

G

## 100PCS Insulated Terminal KIT

CE RoHS

| ITEM NO | HD-100 | | | | | |
|---|---|---|---|---|---|---|
| DETAIL | BV1.25 | 5 | BV2 | 5 | BV5.5 | 5 |
| | MDD1.25-250 | 5 | MDD2-250 | 5 | MDD5.5-250 | 5 |
| | FDD1.25-250 | 5 | FDD2-250 | 5 | FDD5.5-250 | 5 |
| | RV1.25-5 | 5 | RV2-5 | 5 | RV5.5-5 | 5 |
| | RV1.25-6 | 10 | RV2-6 | 5 | RV5.5-6 | 5 |
| | SV1.25-4 | 10 | SV2-4 | 5 | SV5.5-5 | 5 |
| PLASTIC BOX SIZE | 210X110X30MM | | | | | |

## 120PCS Insulated Terminal KIT

CE RoHS

| ITEM NO | HD-120 | | | | | |
|---|---|---|---|---|---|---|
| DETAIL | MPD1.25-156 | 10 | FDFD1.25-110 | 5 | FDD2-187 | 5 |
| | FRD1.25-156 | 10 | FDFD1.25-187 | 5 | FDFD2-250 | 5 |
| | MDD1.25-250 | 10 | MPD2-156 | 5 | MPD5.5-195 | 5 |
| | FDD1.25-250 | 10 | FRD2-156 | 5 | FRD5.5-195 | 5 |
| | FDD1.25-110 | 10 | MDD2-250 | 5 | MDD5.5-250 | 5 |
| | FDD1.25-187 | 10 | FDD2-250 | 5 | FDD5.5-250 | 5 |
| PLASTIC BOX SIZE | 210X110X30MM | | | | | |

G

## 360PCS Insulated Terminal KIT

CE RoHS

| ITEM NO | HD-360 | | | | | |
|---|---|---|---|---|---|---|
| DETAIL | RV1.25-4 | 20 | MPD1.25-156 | 20 | FDD1.25-250 | 20 |
| | RV2-4 | 20 | MPD2-156 | 20 | FDD2-250 | 20 |
| | RV1.25-5 | 20 | FRD1.25-156 | 20 | FDFD1.25-250 | 20 |
| | RV2-5 | 20 | FRD2-156 | 20 | FDFD2-250 | 20 |
| | RV1.25-6 | 20 | MDD1.25-250 | 20 | BV1.25 | 20 |
| | RV2-6 | 20 | MDD2-250 | 20 | BV2 | 20 |
| PLASTIC BOX SIZE | 210X120X30MM | | | | | |

## 185PCS Heat Shrinkable Butt Splices KIT

CE RoHS

| ITEM NO | HD-185 | | | | | |
|---|---|---|---|---|---|---|
| DETAIL | BHT1.25 | 100 | BHT2 | 60 | BHT5.5 | 25 |
| PLASTIC BOX SIZE | 210X110X30MM | | | | | |

G

## 250PCS Heat Shrinkable terminals KIT

CE RoHS

| ITEM NO | HD-250 | | | | | |
|---|---|---|---|---|---|---|
| DETAIL | HRV1.25-5 | 10 | HRV5.5-5 | 10 | BHT2 | 10 |
| | HRV1.25-6 | 10 | HRV5.5-6 | 10 | BHT5.5 | 10 |
| | HRV1.25-8 | 10 | HRV5.5-8 | 10 | HMDD1.25-250 | 10 |
| | HRV1.25-10 | 10 | HRV5.5-10 | 10 | HMDD2-250 | 10 |
| | HRV2-5 | 10 | HSV1.25-5 | 10 | HMDD5.5-250 | 10 |
| | HRV2-6 | 10 | HSV2-5 | 10 | HFDFD1.25-250 | 10 |
| | HRV2-8 | 10 | HSV5.5-5 | 10 | HFDFD2-250 | 10 |
| | HRV2-10 | 10 | BHT1.25 | 20 | HFDFD5.5-250 | 10 |
| PLASTIC BOX SIZE | 210X110X30MM | | | | | |

## 480PCS Heat Shrinkable terminals KIT

CE RoHS

SPECIFICATIONS:

| | | | | | |
|---|---|---|---|---|---|
| Butt splice | 60 pcs | 20x 22-16 AWG(Red) | Ring terminal #10 | 60 pcs | 20x 22-16 AWG(Red) |
| | | 20x 16-14 AWG(Blue) | | | 20x 16-14 AWG(Blue) |
| | | 20x 16-14 AWG( Yellow) | | | 20x 12-10 AWG( Yellow) |
| Male quick Disonnector | 60 pcs | 20x 22-16 AWG(Red) | Ring terminal 1/4" | 60 pcs | 20x 22-16 AWG(Red) |
| | | 20x 16-14 AWG(Red) | | | 20x 16-14 AWG(Blue) |
| | | 20x 12-10 AWG(Yellow) | | | 20x 12-10 AWG( Yellow) |
| Female quick Disconnector | 60 pcs | 20x 22-16 AWG(Red) | Ring terminal 5/16" | 60 pcs | 20x 22-16 AWG(Red) |
| | | 20x 16-14 AWG(Blue) | | | 20x 16-14 AWG(Blue) |
| | | 20x 12-10 AWG(Yellow) | | | 20x 12-10 AWG(Yellow) |
| Fork terminal #10 | 60 pcs | 20x 22-16 AWG(Red) | Ring terminal 3/8" | 60 pcs | 20x 22-16 AWG(Red) |
| | | 20x 22-16 AWG(Red) | | | 20x 16-14 AWG(Blue) |
| | | 20x 12-10 AWG( Yellow) | | | 20x 12-10 AWG( Yellow) |

G

## 255PCS Insulated Terminal KIT

CE RoHS

| ITEM NO | HD-255 | | | | | |
|---|---|---|---|---|---|---|
| DETAIL | FRD1.25-156 | 25 | FDD1.25-250 | 30 | BV1.25 | 25 |
| | MPD1.25-156 | 25 | MDD1.25-250 | 30 | BV2 | 25 |
| | FRD2-156 | 20 | FDD2-250 | 25 | 878100 | 5 |
| | MPD2-156 | 20 | MDD2-250 | 25 | | |
| PLASTIC BOX SIZE | 205X125X30MM | | | | | |

## 228PCS Auto Fuse

CE RoHS

| ITEM NO | HD-228 | | | | | |
|---|---|---|---|---|---|---|
| | BLADE AUTO FUSE | | MINI BLADE FUSE | | GLASS FUSE | |
| DETAIL | 3A | 12 | 3A | 12 | 5A | 6 |
| | 5A | 12 | 5A | 12 | 7.5A | 6 |
| | 7.5A | 12 | 7.5A | 12 | 10A | 6 |
| | 10A | 12 | 10A | 12 | 15A | 6 |
| | 15A | 12 | 15A | 12 | 20A | 6 |
| | 20A | 12 | 20A | 12 | 25A | 6 |
| | 25A | 12 | 25A | 12 | | |
| | 30A | 12 | 30A | 12 | | |
| PLASTIC BOX SIZE | 195X130X36MM | | | | | |

## 212PCS Cable Accessories KIT

CE RoHS

SPECIFICATIONS:

| | | | | | |
|---|---|---|---|---|---|
| Standard Blade Fuse | 25 pcs | 5x5 Amp (Orange) | Mini Blade Fuse | 25 pcs | 5x5 Amp (Orange) |
| | | 5 x 7.5 Amp (Brown) | | | 5 x 7.5 Amp (Brown) |
| | | 5x10 Amp (Red) | | | 5x10 Amp (Red) |
| | | 5 x 15 Amp (Blue) | | | 5x15 Amp (Blue) |
| | | 5 x 20 Amp (Yellow) | | | 5 x 20 Amp (Yellow) |
| Butt Splice | 15 pcs | 5 x Red Joiner | Ring Terminal | 27 pcs | 9 x 4mm (Red, Blue, Yellow) |
| | | 5 x Blue Joiner | | | 9 x 6mm (Red, Blue, Yellow) |
| | | 5 x Yellow Joiner | | | 9 x 8mm (Red, Blue, Yellow) |
| Male Connector | 15 pcs | 5 x 6.3mm (Red) | Female Connector | 15 pcs | 5 x 6.3mm (Red) |
| | | 5 x 6.3mm (Blue) | | | 5 x 6.3mm (Blue) |
| | | 5 x 6.3mm (Yellow) | | | 5 x 6.3mm (Yellow) |
| Heat Shrink | 30 pcs | 10 x 5mm (Black, Red) | Cable Tie | 60 pcs | 30 x 2.5mm x 100mm (Black) |
| | | 10 x 7mm (Black, Red) | | | 30 x 3.5mm x 150mm (Black) |
| | | 10 x 10mm (Black, Red) | | | |

## 101PCS Insulated Terminal KIT

CE RoHS

| ITEM NO | HD-101 | | | |
|---|---|---|---|---|
| DETAIL | RV1.25-4 | 10 | PBDD1.25-250 | 10 |
| | FDD1.25-250 | 10 | PBDD2-250 | 10 |
| | MDD1.25-250 | 10 | MPD2-156 | 10 |
| | FDD2-250 | 10 | FRD2-156 | 10 |
| | MDD2-250 | 10 | FDD5.5-250 | 10 |
| | HD-313 | 1 | | |
| PLASTIC BOX SIZE | 245X110X25MM | | | |

G

## 400PCS Cord end Terminal KIT

CE RoHS

| ITEM NO | HD-400 | |
|---|---|---|
| DETAIL | E0508 | 50 |
| | E7508 | 100 |
| | E1008 | 100 |
| | E1510 | 100 |
| | E2510 | 50 |
| PLASTIC BOX SIZE | 92X40MM | |

# 配綫器材
# Wiring Accessories

www.cnhowder.com

## H Type Terminal Block (12 Pole)

H series 12 pole terminal blocks are suitable for continuity or branching-off connectors between electric conductors.

**Material:**

- Insert: brass
- Plastic: PE, PP or PA

**Color**: Natural, Black, White

**Technical Data**:

- Max. Operating temperature: -5℃~+85℃ for PE
  -30℃~+110℃ for PA(VDE)
- According to :EN60998-1 EN60998-2-1

CE SGS RoHS

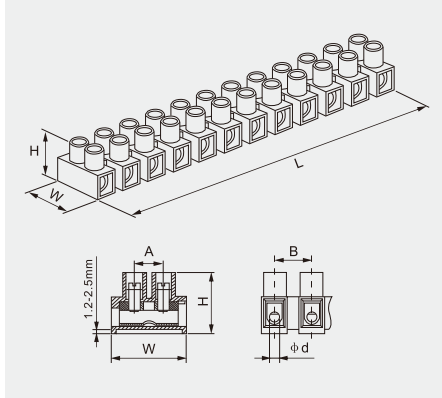


| ITEM NO . | RATED CURRENT(A) | SECTION SIZE ($mm^2$) | L (mm) | W (mm) | H (mm) | A (mm) | B (mm) | φd (mm) |
|---|---|---|---|---|---|---|---|---|
| H-3 | 3 | 2.5/4 | 92 | 16 | 12.2 | 5.5 | 7.5 | 2.7 |
| H-6 | 6 | 6 | 119 | 17.3 | 13.9 | 6.5 | 8.2 | 3.3 |
| H-10 | 10 | 10 | 131 | 20.85 | 16.4 | 7.25 | 11.2 | 3.71 |
| H-15 | 15 | 12 | 135 | 22.65 | 18.25 | 8.25 | 11.5 | 4.2 |
| H-20 | 20 | 14 | 141.6 | 22.65 | 18.4 | 8.5 | 12.2 | 4.5 |
| H-30 | 30 | 16 | 165 | 24.1 | 21.1 | 9.5 | 14.1 | 5.5 |
| H-60 | 60 | 25 | 190 | 30.8 | 25.2 | 11.15 | 16.5 | 6.3 |
| H-80 | 80 | 30 | 201 | 36 | 22.65 | 12.1 | 18.15 | 6.9 |
| H-100 | 100 | 35 | 228 | 38 | 33 | 13.8 | 19.4 | 7.4 |
| H-150 | 150 | 40 | 261 | 44 | 33 | 21.2 | 22 | 8.3 |

H

## F(V) Type Terminal Block (12 Pole)

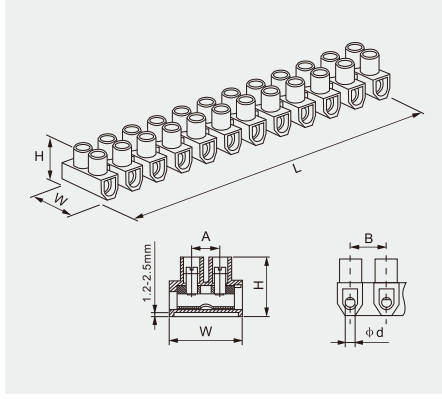


- Material: made from PA, PE or PP.
- Color: Natural, Black, White

CE SGS RoHS

| ITEM NO . | RATED CURRENT(A) | SECTION SIZE ($mm^2$) | L (mm) | W (mm) | H (mm) | A (mm) | B (mm) | φd (mm) |
|---|---|---|---|---|---|---|---|---|
| F-3 | 3 | 2.5/4 | 91.25 | 15.7 | 13.5 | 5.7 | 8 | 3.2 |
| F-5 | 5 | 6 | 109.35 | 16.9 | 14.5 | 6.5 | 9.21 | 3.3 |
| F-10 | 10 | 10 | 126.2 | 20.25 | 15.8 | 8.25 | 10.6 | 3.85 |
| F-15 | 15 | 12 | 135 | 22.6 | 17.6 | 8.3 | 11.9 | 4.3 |
| F-30 | 30 | 16 | 156 | 25.65 | 20.5 | 9.1 | 13.1 | 5.5 |
| F-60 | 60 | 25 | 189 | 29.9 | 25.6 | 13.0 | 15.8 | 6.6 |
| F-80 | 80 | 30 | 205 | 36.1 | 29.9 | 14.2 | 17.2 | 7.3 |

## W(U) Type Terminal Block (12 Pole)

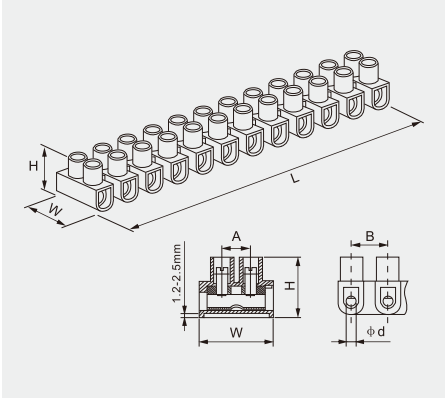


- Material: made from PA, PE or PP.
- Color: Natural, Black, White

CE SGS RoHS

| ITEM NO . | RATED CURRENT(A) | SECTION SIZE ($mm^2$) | L (mm) | W (mm) | H (mm) | A (mm) | B (mm) | φd (mm) |
|---|---|---|---|---|---|---|---|---|
| W-3 | 3 | 2.5/4 | 93 | 13.1 | 12.15 | 4.1 | 8 | 2.55 |
| W-6 | 6 | 6 | 103.8 | 18.5 | 13.85 | 6.6 | 9 | 3.6 |
| W-10 | 10 | 10 | 127.7 | 19.35 | 15.4 | 7.1 | 11.1 | 3.71 |
| W-15 | 15 | 12 | 134 | 22.3 | 17.2 | 8.3 | 11.5 | 4.2 |
| W-20 | 20 | 14 | 144 | 22.5 | 17.4 | 8.65 | 12.2 | 4.5 |
| W-30 | 30 | 16 | 163 | 24.9 | 19 | 9.1 | 14.1 | 5.5 |
| W-60 | 60 | 25 | 187 | 28.65 | 21.4 | 11.2 | 16 | 6.3 |
| W-80 | 80 | 30 | 208 | 35.8 | 29.15 | 12.2 | 18 | 7.4 |

H

## H-E Type Terminal Block (VDE Standard) (12 Pole)

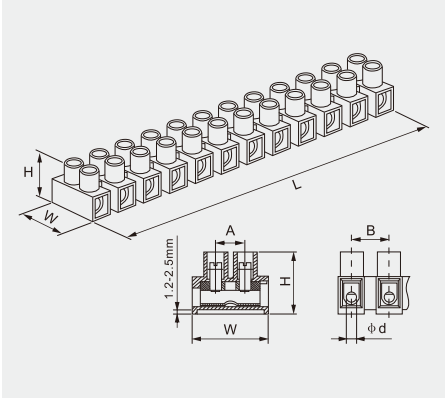


**Material**: **Color**: Natural, White

- Insert: brass
- Plastic: PE, PP or PA

**Technical Data**:

- Max. Operating temperature: -5℃~+85℃ for PE
  -30℃~+110℃ for PA(VDE)
- According to :EN60998-1 EN60998-2-1

CE SGS RoHS

| ITEM NO . | RATED CURRENT(A) | SECTION SIZE ($mm^2$) | L (mm) | W (mm) | H (mm) | A (mm) | B (mm) | φd (mm) |
|---|---|---|---|---|---|---|---|---|
| H-E8 | 17.5 | 1.5 | 95.37 | 16.9 | 15.05 | 6.3 | 8.2 | 2.9 |
| H-E10 | 24 | 2.5 | 117 | 20.5 | 16.8 | 9.6 | 10.1 | 3.2 |
| H-E12 | 41 | 6 | 140.1 | 23.9 | 18.8 | 10 | 12.2 | 4.2 |
| H-E14 | 57 | 10 | 158 | 25.7 | 25.15 | 10.75 | 13.6 | 5 |

## H-N Type Terminal Block (12 Pole)

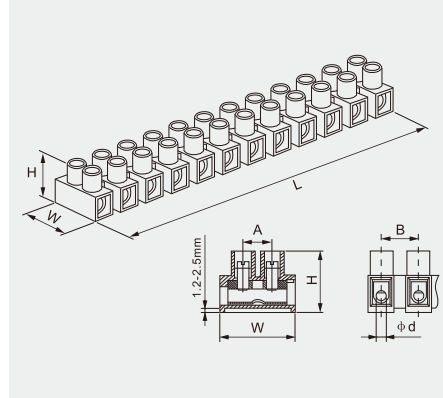


- Material: made from PE
- Color: White, Black

CE SGS RoHS

| ITEM NO . | SECTION SIZE ($mm^2$) | L (mm) | W (mm) | H (mm) | A (mm) | B (mm) | φd (mm) |
|---|---|---|---|---|---|---|---|
| HN-6 | 6 | 118.5 | 19.1 | 15.1 | 7.5 | 10.4 | 3.4 |
| HN-10 | 10 | 134.4 | 23.55 | 17 | 9.7 | 11.7 | 4.3 |
| HN-16 | 16 | 171 | 25.4 | 21.1 | 9.5 | 14.8 | 5.7 |

H

## 8T Type Terminal Block (8 Pole)

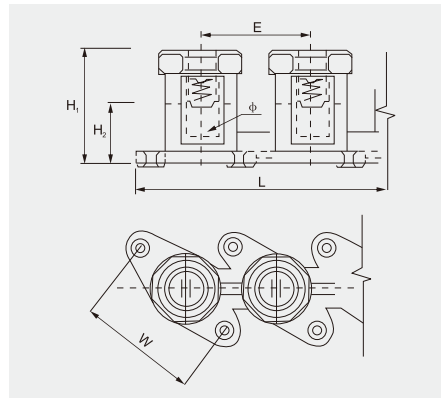


- Insulating Material: PA
- Insert: Brass
- Color: Grey, Blue Grey, White
- Voltage: 230~450V

CE SGS RoHS

| ITEM NO . | SECTION SIZE ($mm^2$) | L (mm) | W (mm) | H1 (mm) | H2 (mm) | E (mm) | φ (mm) | ORDER REF. (PCS/CTN) |
|---|---|---|---|---|---|---|---|---|
| 8T16 | 16 | 173 | 26.4 | 23.6 | 12.1 | 21 | 8×5 | 200 |
| 8T25 | 25 | 206 | 31.4 | 27 | 13.1 | 24.8 | 9×6 | 100 |
| 8T35 | 35 | 251 | 41.5 | 32.3 | 17.3 | 30.3 | 12×8 | 80 |
| 8T50 | 50 | 260 | 42 | 34 | 17.3 | 32 | 14×8.5 | 60 |
| 8T70 | 70 | 271 | 43.5 | 37.9 | 21.5 | 33.2 | 16×9 | 40 |

## C Type Terminal Block(10 Pole)

**Technical Data:**
- Maximum operating temperature: +85℃
- Heat resistance: +130℃
- Building according to standards: EN60998-1, EN60998-2-1

**Materials:**
- Insert: Brass
- Screws: Zinc Plated Steel
- Insulating body: Polycarbonate

CE SGS RoHS

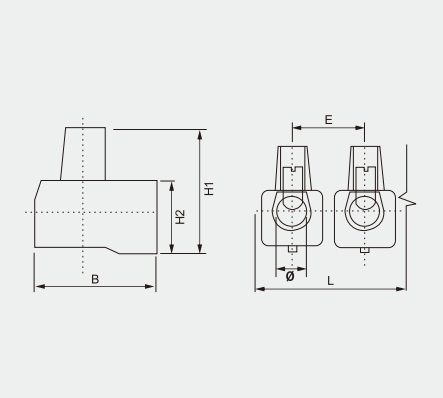


| ITEM NO . | SECTION SIZE ($mm^2$) | L (mm) | B (mm) | H1 (mm) | H2 (mm) | E (mm) | φ (mm) |
|---|---|---|---|---|---|---|---|
| C22 | 2.5 | 120 | 18 | 19 | 11 | 12 | 4.16 |
| C23 | 4 | 121 | 20 | 18 | 10 | 12 | 4.76 |
| C24 | 6 | 145 | 22 | 23 | 12 | 14.5 | 5.83 |
| C25 | 10 | 169 | 25 | 26 | 17 | 17.5 | 7.58 |
| C26 | 16 | 212 | 32 | 33 | 20 | 21 | 10.18 |



## T Type Terminal Block(Single Pole)

**Material**:
- Insert: brass
- Plastic: polycarbonate

CE SGS RoHS

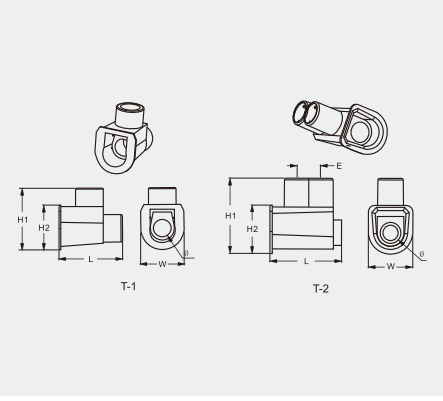


| ITEM NO . | SECTION SIZE ($mm^2$) | L (mm) | W (mm) | H1 (mm) | H2 (mm) | E (mm) | φ (mm) |
|---|---|---|---|---|---|---|---|
| T-1 | 6 | 19.9 | 13.65 | 19.8 | 14.1 | | 5.6 |
| T-2 | 6 | 21.8 | 14 | 24 | 15.5 | 7.3 | 6.5 |

## LC Type Terminal Block

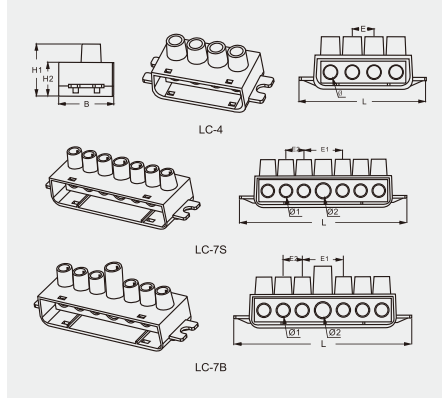


**Material**:
- Insert: brass
- Plastic: polycarbonate

CE SGS RoHS

| ITEM NO . | SECTION SIZE ($mm^2$) | L (mm) | B (mm) | H1 (mm) | H2 (mm) | E1 (mm) | E2 (mm) | φ1 (mm) | φ2 (mm) |
|---|---|---|---|---|---|---|---|---|---|
| LC-4 | 4×16 | 53.05 | 22.7 | 21.3 | 14 | 9 | | 5.4 | |
| LC-7S | 1×25 + 6×16 | 83.8 | 25.4 | 24.7 | 16.65 | 19.7 | 9 | 5.8 | 7 |
| LC-7B | 1×50 + 6×35 | 110 | 35 | 29 | 21 | 28 | 13 | 8 | 10.5 |

H

## B4 Type Terminal Block(4 Pole)

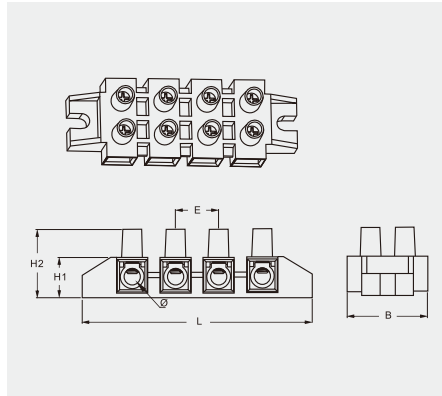


**Plastic:** PA, PE
**Insert**: brass

CE SGS RoHS

| ITEM NO . | SECTION SIZE ($mm^2$) | L (mm) | B (mm) | H1 (mm) | H2 (mm) | E (mm) | φ (mm) |
|---|---|---|---|---|---|---|---|
| B4 | 16 | 77.5 | 27.3 | 13.3 | 22.9 | 14.6 | 5.6 |

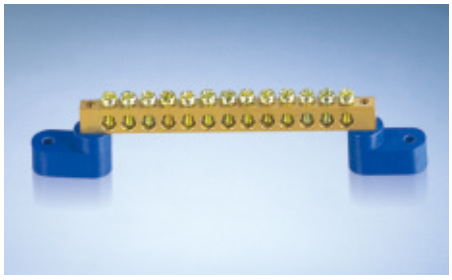

## BC-1A

| ITEM NO. | BC-1A04 | BC-1A06 | BC-1A08 | BC-1A10 | BC-1A12 | BC-1A14 | BC-1A16 |
|---|---|---|---|---|---|---|---|
| No.of holes | 4 | 6 | 8 | 10 | 12 | 14 | 16 |
| Brass size(mm) | 6×9 | | | | | | |
| Plastic color | Blue, yellow | | | | | | |

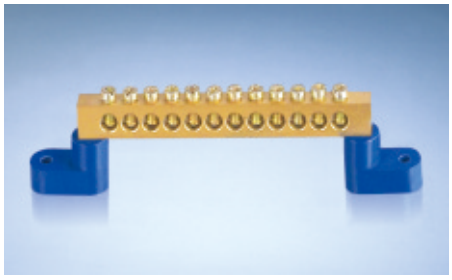

## BC-1B

| ITEM NO. | BC-1B04 | BC-1B06 | BC-1B08 | BC-1B10 | BC-1B12 | BC-1B14 | BC-1B16 |
|---|---|---|---|---|---|---|---|
| No.of holes | 4 | 6 | 8 | 10 | 12 | 14 | 16 |
| Brass size(mm) | 8×12 | | | | | | |
| Plastic color | Blue, yellow | | | | | | |

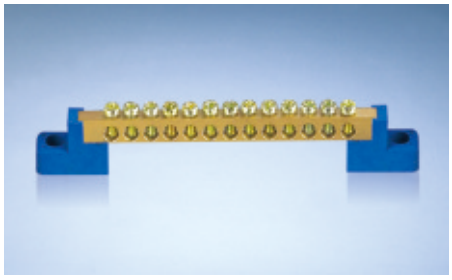

## BC-2A

| ITEM NO. | BC-2A04 | BC-2A06 | BC-2A08 | BC-2A10 | BC-2A12 | BC-2A14 | BC-2A16 |
|---|---|---|---|---|---|---|---|
| No.of holes | 4 | 6 | 8 | 10 | 12 | 14 | 16 |
| Brass size(mm) | 6×9 | | | | | | |
| Plastic color | Blue, yellow | | | | | | |

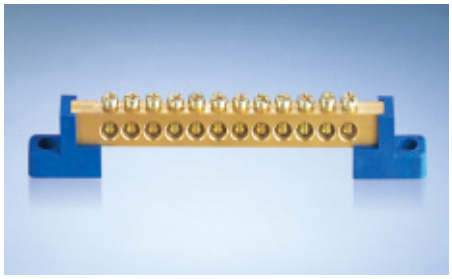

## BC-2B

| ITEM NO. | BC-2B04 | BC-2B06 | BC-2B08 | BC-2B10 | BC-2B12 | BC-2B14 | BC-2B16 |
|---|---|---|---|---|---|---|---|
| No.of holes | 4 | 6 | 8 | 10 | 12 | 14 | 16 |
| Brass size(mm) | 8×12 | | | | | | |
| Plastic color | Blue, yellow | | | | | | |

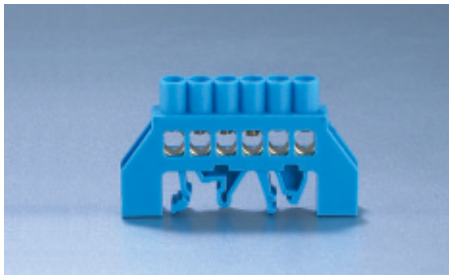

## BC-3A

| ITEM NO. | BC-3A06 | BC-3A08 | BC-3A10 | BC-3A12 | BC-3A14 |
|---|---|---|---|---|---|
| No.of holes | 6 | 8 | 10 | 12 | 14 |
| Brass size(mm) | 6×9 | | | | |
| Plastic color | Blue,Green | | | | |

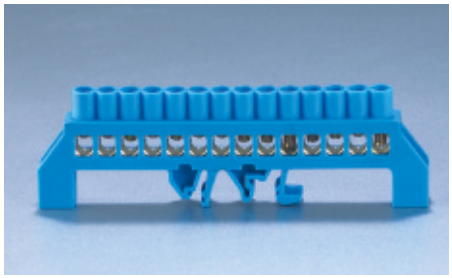

## BC-3B

| ITEM NO. | BC-3B06 | BC-3B08 | BC-3B10 | BC-3B12 | BC-3B14 |
|---|---|---|---|---|---|
| No.of holes | 6 | 8 | 10 | 12 | 14 |
| Brass size(mm) | 8×12 | | | | |
| Plastic color | Blue,Green | | | | |

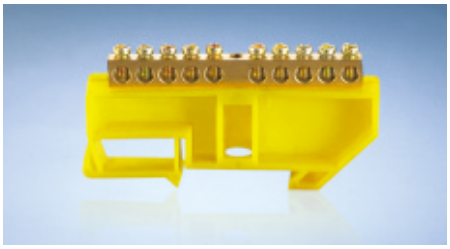

## BC-4A

| ITEM NO. | BC-4A04 | BC-4A06 | BC-4A08 | BC-4A10 | BC-4A12 | BC-4A14 |
|---|---|---|---|---|---|---|
| No.of holes | 4 | 6 | 8 | 10 | 12 | 14 |
| Brass size(mm) | 6×9 | | | | | |
| Plastic color | Blue, yellow | | | | | |

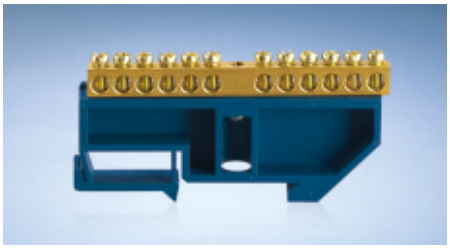

## BC-4B

| ITEM NO. | BC-4B04 | BC-4B06 | BC-4B08 | BC-4B10 | BC-4B12 | BC-4B14 |
|---|---|---|---|---|---|---|
| No.of holes | 4 | 6 | 8 | 10 | 12 | 14 |
| Brass size(mm) | 8×12 | | | | | |
| Plastic color | Blue, yellow | | | | | |

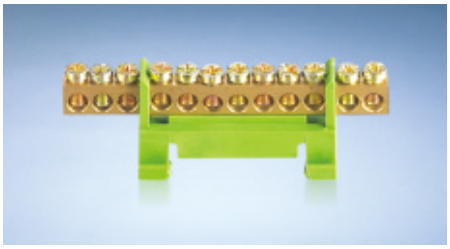

## BC-5

| ITEM NO. | BC-507 | BC-508 | BC-510 | BC-512 | BC-513 | BC-515 |
|---|---|---|---|---|---|---|
| No.of holes | 7 | 8 | 10 | 12 | 13 | 15 |
| Brass size(mm) | 6×9 | | | | | |
| Plastic color | Blue, Green | | | | | |

H

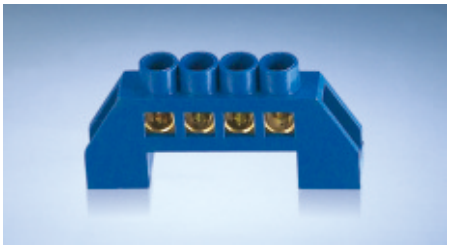

## BC-6A

| ITEM NO. | BC-6A04 | BC-6A06 | BC-6A08 | BC-6A10 | BC-6A12 |
|---|---|---|---|---|---|
| No.of holes | 4 | 6 | 8 | 10 | 12 |
| Brass size(mm) | 6×9 | | | | |
| Plastic color | Blue,Green | | | | |

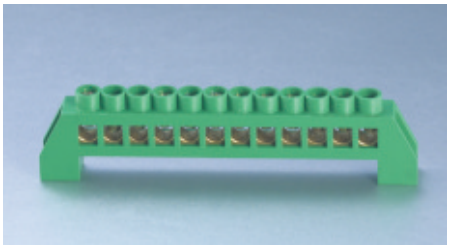

## BC-6B

| ITEM NO. | BC-6B04 | BC-6B06 | BC-6B08 | BC-6B10 | BC-6B12 |
|---|---|---|---|---|---|
| No.of holes | 4 | 6 | 8 | 10 | 12 |
| Brass size(mm) | 8×12 | | | | |
| Plastic color | Blue,Green | | | | |

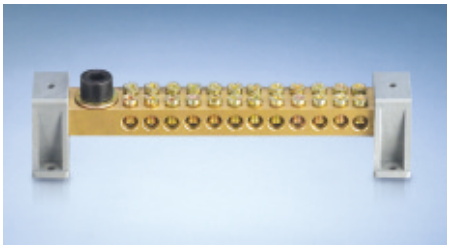

## BC-7

| ITEM NO. | BC-7204 | BC-7206 | BC-7208 | BC-7212 | BC-7214 |
|---|---|---|---|---|---|
| No.of holes | 2×4+1 | 2×6+1 | 2×8+1 | 2×12+1 | 2×14+1 |
| Plastic color | Grey | | | | |

## BBT Type Terminal Block Terminals

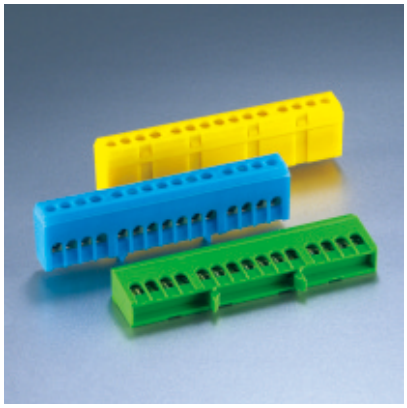

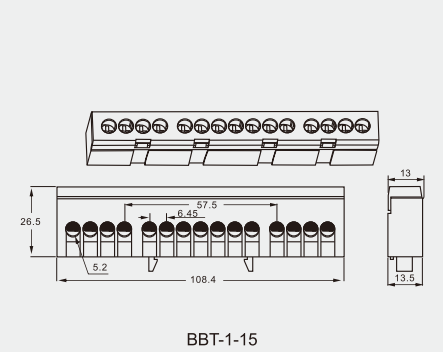


BBT-1-15

Standard: DIN 57609, VDE 0609-1

CE SGS RoHS

| ITEM NO. | CROSS-SECTION | RATED CURRENT | BRASS SIZE | PLASTIC | COLOR |
|---|---|---|---|---|---|
| BBT-1-07 | 7×16mm² | 63A | 6×9 | PA | Green, Yellow, Blue |
| BBT-1-12 | 12×16mm² | | | | |
| BBT-1-15 | 15×16mm² | | | | |

## BC-10

Standard: DIN 57609, VDE 0609-1

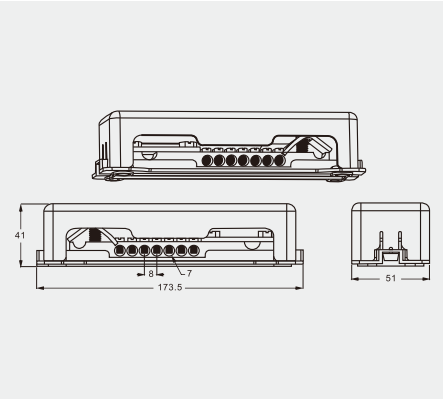


CE SGS RoHS

| ITEM NO. | CROSS-SECTION | PLASTIC | COLOR |
|---|---|---|---|
| BC-10 | 14×25mm² | ABS | Grey |

## Brass Bus Bar

Size available :

- **6×9**: 4, 6, 8, 10, 12, 14, 16, 18, 20, 24 holes
- **8×12**: 4, 6, 8, 10, 12, 14, 16, 18, 20, 24 holes
- **6×9×500**mm
- **8×12×1000**mm

Special size is available upon request.

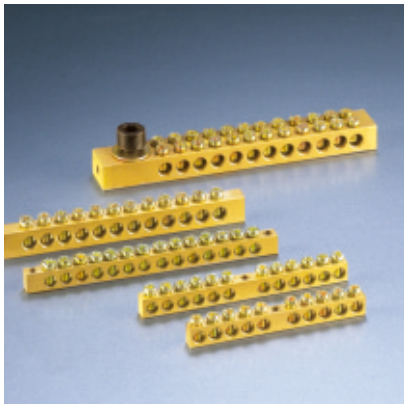

CE SGS RoHS

H

## Nylon Cable Tie

**Material:** Nylon 66,94V-2 certificated by UL . Fire resisting Acid & erosion control, insulate well nd not apt to age.
**Operating temperature:** -35℃ to 85℃.
**Color:** Natural(or white, standard color), UV black and other colors are available upon requested.

CE SGS RoHS

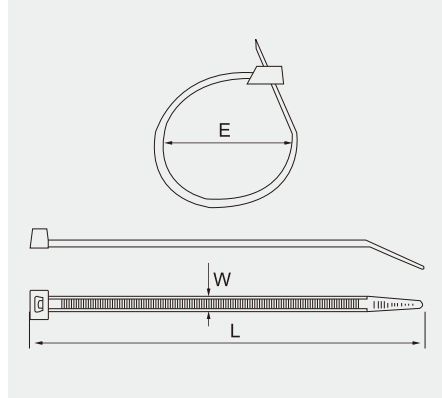


| ITEM NO. | L | | W (mm) | Bundle Diameter(mm) | TENSILE STRENGTH | |
|---|---|---|---|---|---|---|
| | Inch | mm | | | LBS | KGS |
| 2.5 × 60 | 2.4 " | 60 | 2.5 | 2-11 | 18 | 8 |
| 2.5 × 80 | 3.2 " | 80 | | 2-16 | | |
| 2.5 × 100 | 4.0 " | 100 | | 2-22 | | |
| 2.5 × 120 | 4.7 " | 120 | | 2-30 | | |
| 2.5 × 150 | 6.0 " | 50 | | 2-35 | | |
| 2.5 × 160 | 6.3 " | 160 | | 2-40 | | |
| 2.5 × 200 | 8.0 " | 200 | | 3-50 | | |
| 3.5 × 150 | 6.0 " | 150 | 3.5 | 3-35 | 40 | 18 |
| 3.5 × 180 | 7.1 " | 180 | | 3-42 | | |
| 3.5 × 200 | 8.0 " | 200 | | 3-50 | | |
| 3.5 × 250 | 10 " | 250 | | 3-65 | | |
| 3.5 × 280 | 11 " | 280 | | 3-70 | | |
| 3.5 × 300 | 12 " | 300 | | 3-80 | | |
| 3.5 × 370 | 14.6 " | 370 | | 3-105 | | |
| 4.8 × 120 | 4.7 " | 120 | 4.8 | 3-30 | 50 | 22 |
| 4.8 × 160 | 6.3 " | 160 | | 3-40 | | |
| 4.8 × 180 | 7.1 " | 180 | | 3-42 | | |
| 4.8 × 200 | 8.0 " | 200 | | 3-50 | | |
| 4.8 × 250 | 10 " | 250 | | 3-60 | | |
| 4.8 × 280 | 11 " | 280 | | 3-70 | | |
| 4.8 × 300 | 12 " | 300 | | 3-80 | | |
| 4.8 × 350 | 14 " | 350 | | 3-90 | | |
| 4.8 × 370 | 14.6 " | 370 | | 3-98 | | |
| 4.8 × 400 | 16 " | 400 | | 3-105 | | |
| 4.8 × 430 | 16.9 " | 430 | | 3-120 | | |
| 4.8 × 450 | 17.7 " | 450 | | 3-130 | | |
| 4.8 × 500 | 19.7 " | 500 | | 3-150 | | |
| 7.2 × 150 | 6.0 " | 150 | 7.2 | 3-35 | 120 | 55 |
| 7.2 × 200 | 8.0 " | 200 | | 3-50 | | |
| 7.2 × 250 | 10 " | 250 | | 4-65 | | |
| 7.2 × 300 | 12 " | 300 | | 4-80 | | |

| ITEM NO. | L | | W (mm) | Bundle Diameter(mm) | TENSILE STRENGTH | |
|---|---|---|---|---|---|---|
| | Inch | mm | | | LBS | KGS |
| 7.6 × 350 | 14 " | 350 | 7.6 | 4-90 | 120 | 55 |
| 7.6 × 400 | 16 " | 400 | | 4-105 | | |
| 7.6 × 450 | 18 " | 450 | | 4-110 | | |
| 7.6 × 500 | 20 " | 500 | | 4-150 | | |
| 7.6 × 530 | 20.9 " | 530 | | 4-160 | | |
| 7.6 × 550 | 21.6 " | 550 | | 4-165 | | |
| 9.0 × 400 | 16 " | 400 | 9.0 | 8-105 | 175 | 79.4 |
| 9.0 × 450 | 18 " | 450 | | 8-118 | | |
| 9.0 × 500 | 20 " | 500 | | 8-150 | | |
| 9.0 × 550 | 21.6 " | 550 | | 8-160 | | |
| 9.0 × 600 | 23.6 " | 600 | | 8-170 | | |
| 9.0 × 650 | 25.6 " | 650 | | 8-185 | | |
| 9.0 × 720 | 28.3 " | 720 | | 10-195 | | |
| 9.0 × 760 | 28.3 " | 760 | | 10-210 | | |
| 9.0 × 800 | 31.5 " | 800 | | 10-230 | | |
| 9.0 × 900 | 35.5 " | 900 | | 10-265 | | |
| 9.0 × 1020 | 29.4 " | 1020 | | 10-300 | | |
| 9.0 × 1200 | 47.2 " | 1200 | | 10-370 | | |
| 12 × 650 | 26.5 " | 650 | 12 | 14-185 | 250 | 114 |
| 12 × 900 | 25.5 " | 900 | | 14-265 | | |

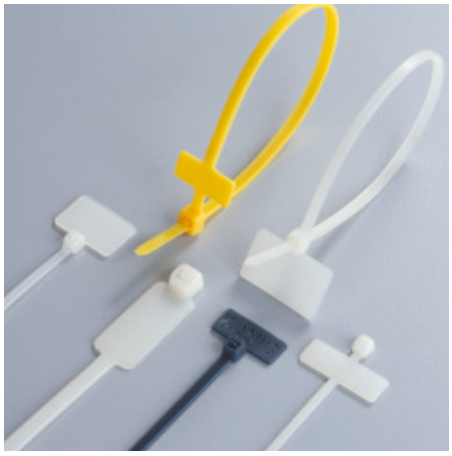

## Marker Tie

| ITEM NO. | SIZE | | | MAZ BUNDLE DIAMTER(MM) | MIN TENSILE STRENGTH | |
|---|---|---|---|---|---|---|
| | L | W | AxB | | LBS | KGS |
| 100MKT | 100 | 2.5 | 20×13 | 22 | 18 | 8 |
| 150MKT | 150 | 3.6 | 25×15 | 35 | 40 | 18 |
| 200MKT | 200 | 3.6 | 25×15 | 50 | 40 | 18 |

## Easy Releasable Tie

| ITEM NO. | L | | W (mm) | MAZ BUNDLE DIAMTER(MM) | MIN TENSILE STRENGTH | |
|---|---|---|---|---|---|---|
| | mm | Inch | | | LBS | KGS |
| 150LH-R | 150 | 6″ | 7 | 35 | 50 | 22 |
| 200LH-R | 200 | 8″ | 7 | 50 | 50 | 22 |
| 250LH-R | 250 | 10″ | 7 | 65 | 50 | 22 |
| 300LH-R | 300 | 11″ | 7 | 80 | 50 | 22 |
| 350LH-R | 350 | 13″ | 7 | 90 | 50 | 22 |
| 400LH-R | 400 | 15″ | 7 | 100 | 50 | 22 |

## Nylon Stainless Steel Inlay Block Ties

| SPECIFICATION (WXL) | EFFECTIVE LENGTH (MM) | MAXI BUNDLDE DIAMET ( ϕ ) | WITHSTAND FORCE (N) | PACKAGE (PCS/BAG) |
|---|---|---|---|---|
| 3x100 | 80 | 25 | 50 | 100 |
| 4x150 | 120 | 35 | 150 | 100 |
| 4x200 | 170 | 50 | 150 | 100 |
| 5x250 | 210 | 60 | 150 | 100 |
| 5x300 | 260 | 80 | 170 | 100 |
| 6x200 | 170 | 50 | 180 | 100 |
| 8x145 | 115 | 35 | 250 | 100 |
| 8x175 | 145 | 45 | 250 | 100 |
| 8x200 | 170 | 50 | 250 | 100 |
| 8x240 | 200 | 60 | 250 | 100 |
| 10x300 | 260 | 80 | 500 | 100 |
| 10x350 | 310 | 95 | 500 | 100 |
| 10x400 | 360 | 110 | 500 | 100 |
| 10x450 | 410 | 130 | 500 | 100 |
| 10x600 | 540 | 160 | 500 | 100 |

## Stainless Steel Lock Steel Ball Ties

| SPECIFICATION (WXL) | MAXI BUNDLDE DIAMET ( ϕ ) | THICKNESS (MM) | PACKAGE (PCS/BAG) |
|---|---|---|---|
| 4.6x100 | 23 | 0.25mm | 100 |
| 4.6x150 | 38 | 0.25mm | 100 |
| 4.6x200 | 52 | 0.25mm | 100 |
| 4.6x250 | 68 | 0.25mm | 100 |
| 4.6x300 | 84 | 0.25mm | 100 |
| 4.6x460 | 103 | 0.25mm | 100 |
| 4.6x500 | 148 | 0.25mm | 100 |
| 8x200 | 52 | 0.25mm | 100 |
| 8x250 | 68 | 0.25mm | 100 |
| 8x300 | 84 | 0.25mm | 100 |
| 8x400 | 114 | 0.25mm | 100 |
| 12x150 | 38 | 0.25mm | 100 |
| 12x200 | 52 | 0.25mm | 100 |
| 12x300 | 84 | 0.25mm | 100 |
| 12x400 | 116 | 0.25mm | 100 |



## Magic Cable Tie

**Material:** Female sides are made of PP, male sides are made of Nylon.

| ITEM NO. | L (MM) | W (MM) | MAX. BUNDLE DIA (MM) | REMARK |
|---|---|---|---|---|
| MGT-125 | 125 | 12 | 30 | Other size are available as requsted. |
| MGT-135 | 135 | | 33 | |
| MGT-150 | 150 | | 35 | |
| MGT-180 | 180 | | 40 | |
| MGT-210 | 210 | 16 | 50 | |
| MGT-250 | 250 | | 65 | |

## Nylon Fixing Plate(With Sticker)

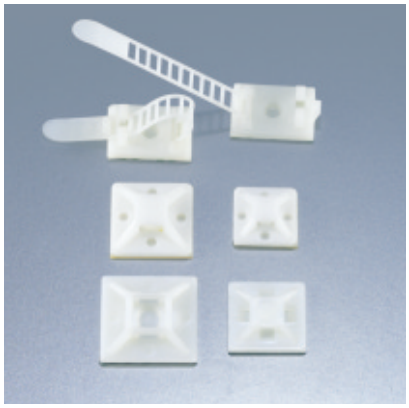

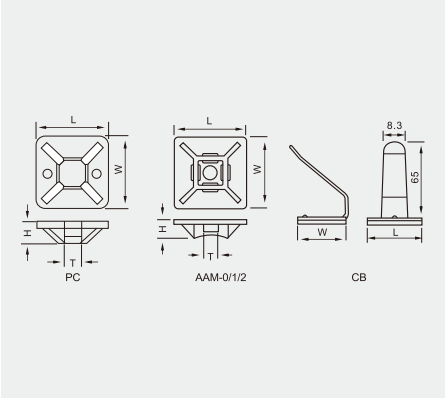


CE SGS RoHS

| ITEM NO. | L x W | H(MM) | T(MM) | SCREW HOLD (MM) | PACKING |
|---|---|---|---|---|---|
| PC-20 | 19×19 | 7 | 8 | / | 100 PCS/BAG |
| PC-25 | 24×24 | 8 | 10 | / | |
| PC-30 | 29×29 | 9 | 11 | / | |
| PC-40 | 38×38 | 10 | 12 | 7 | |
| AAM-0 | 13×13 | 40 | 10 | 7 | |
| AAM-1 | 19×19 | 46 | 6 | 5.5 | |
| AAM-2 | 28×28 | 64 | 14 | / | |
| CB | 18×25 | 3 | 8 | 4.5 | |

H

## Expand Nail

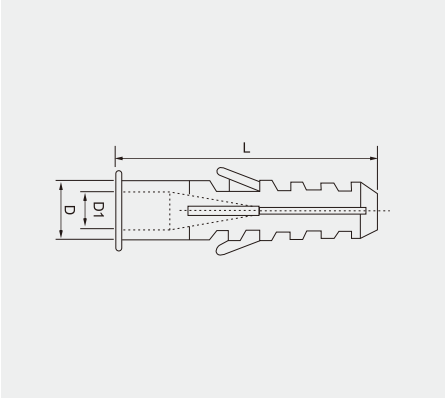


◎ Material:PE
◎ Color:White or other colors.

CE SGS RoHS

| ITEM NO . | Size(mm) | | | PACKING (PCS/BAG) | |
|---|---|---|---|---|---|
| | L | D | D1 | | |
| EN-06 | 29.8 | 6.0 | 4.9 | 100 | 1000 |
| EN-08 | 38.6 | 7.9 | 5.3 | 100 | 1000 |
| EN-10 | 42.7 | 9.9 | 5.8 | 100 | 500 |
| EN-12 | 47.9 | 11.6 | 6.3 | 100 | 500 |

## Cable Tie Holder

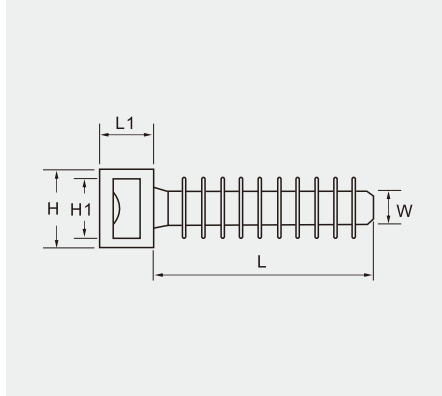


CE SGS RoHS

| ITEM NO. | L | L1 | W | H | H1 | PACKING |
|---|---|---|---|---|---|---|
| FEN-6 | 31 | 6.0 | 8.0 | 12.7 | 9.7 | 100PCS |
| FEN-8 | 37 | 6.0 | 10 | 12.7 | 9.7 | 100PCS |

H

## EC Type Cable Marker

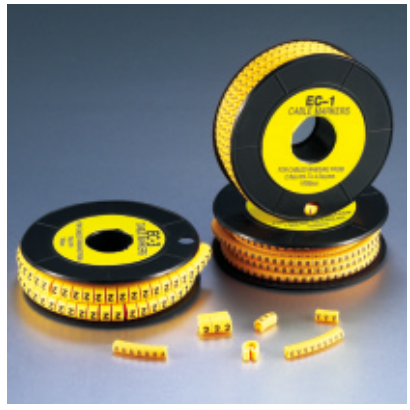


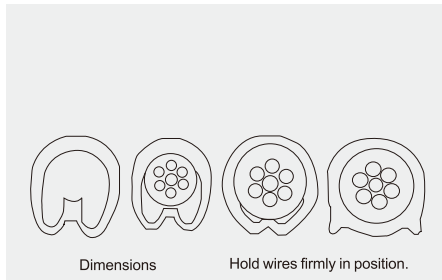


◎ Material:PVC oil and erosion resistant, heat resistant up to 85□
◎ Color:Yellow or other color.

CE SGS RoHS

| ITEM NO . | DIA. RANGE(MIN MAX) | | PRINTING | PACKING (PCS/ROLL) |
|---|---|---|---|---|
| EC-0 | 0.75-1.5 | 2.0-3.2 | 0,1,2,3...9<br>A,B,C...Z<br>+,-,/,\ | 1000 |
| EC-1 | 0.75-3.5 | 3.0-4.2 | | 1000 |
| EC-2 | 0.75-8.0 | 3.6-7.4 | | 500 |
| EC-3 | 5.2-10.5 | 5.2-10.0 | | 350 |
| EC-J (Flat type) | 2.0-8.0 | 3.5-7.0 | | 500 |

# HTS Type Heat-shrinkable Tube

- HTS series radiation cross-linking low temperature resistance fire tube has function of excellent insulation, age-resistance and softness, has the characteristics of fire-resistanceand shrinkable temperature of 125℃, which can be done by high heat hair-dryer. they are widely used in communication, electronic, aviation and war industry and other fields for wiring insulation, water resistion, wet resistion and arproof, etc.
- stand color:black, white, red, yellow.blue, green,grey.

| ITEM NO. | SIZE | DIMENSION BEFORE SHRINKING(MM) | DIMENSION AFTER SHRINKING(MM) | | IENGTH PER ROLL (MM) |
|---|---|---|---|---|---|
| | | INTERNAL DIAMETER | MAX INTERNAL DIAMETER | WALL THICKNESS | |
| HTS-1 | 1.0/0.5 | 1.0±0.3 | 0.5±0.1 | 0.25±0.01 | 200 |
| HTS-1.5 | 1.5/0.75 | 1.5±0.3 | 0.75±0.1 | 0.25±0.01 | 200 |
| HTS-2 | 2.0/1.0 | 2.0±0.3 | 1.0±0.1 | 0.25±0.01 | 200 |
| HTS-2.5 | 2.5/1.25 | 2.5±0.3 | 1.25±0.1 | 0.25±0.01 | 200 |
| HTS-3 | 3.0/1.5 | 3.0±0.3 | 1.5±0.1 | 0.30±0.01 | 200 |
| HTS-3.5 | 3.5/1.75 | 3.5±0.3 | 1.75±0.1 | 0.32±0.01 | 200 |
| HTS-4 | 4.0/2.0 | 4.0±0.3 | 2.0±0.1 | 0.34±0.01 | 200 |
| HTS-4.5 | 5.0/2.5 | 5.0±0.3 | 2.5±0.2 | 0.46±0.01 | 100 |
| HTS-6 | 6.0/3.0 | 6.0±0.4 | 3.0±0.2 | 0.46±0.01 | 100 |
| HTS-7 | 7.0/3.5 | 7.0±0.4 | 3.5±0.2 | 0.46±0.01 | 100 |
| HTS-8 | 8.0/4.0 | 8.0±0.4 | 4.0±0.2 | 0.48±0.01 | 100 |
| HTS-9 | 9.0/4.5 | 9.0±0.4 | 4.5±0.2 | 0.52±0.01 | 100 |
| HTS-10 | 10.0/5.0 | 10.0±0.4 | 5.0±0.2 | 0.52±0.01 | 100 |
| HTS-11 | 11.0/5.5 | 11.0±0.4 | 5.5±0.2 | 0.52±0.01 | 100 |
| HTS-12 | 12.0/6.0 | 12.0±0.4 | 6.0±0.3 | 0.24±0.01 | 100 |
| HTS-13 | 13.0/6.5 | 13.0±0.4 | 6.5±0.3 | 0.26±0.01 | 100 |
| HTS-14 | 14.0/7.0 | 14.0±0.4 | 7.0±0.3 | 0.26±0.01 | 100 |
| HTS-15 | 15.0/7.5 | 15.0±0.4 | 7.5±0.4 | 0.62±0.01 | 100 |
| HTS-16 | 16.0/8.0 | 16.0±0.5 | 8.0±0.3 | 0.62±0.01 | 100 |
| HTS-17 | 17.0/8.5 | 17.0±0.5 | 8.5±0.3 | 0.63±0.02 | 100 |
| HTS-18 | 18.0/9.0 | 18.0±0.5 | 9.0±0.3 | 0.70±0.02 | 50 |
| HTS-20 | 20.0/10.0 | 20.0±0.5 | 10.0±0.3 | 0.72±0.02 | 50 |
| HTS-22 | 22.0/11.0 | 22.0±0.5 | 11.0±0.3 | 0.75±0.02 | 25 |
| HTS-25 | 25.0/12.5 | 25.0±0.8 | 12.5±1.0 | 0.80±0.02 | 25 |
| HTS-28 | 28.0/14.0 | 28.0±0.8 | 14.0±1.0 | 0.80±0.02 | 25 |
| HTS-30 | 30.0/15.0 | 30.0±0.8 | 15.0±1.0 | 0.82±0.02 | 25 |
| HTS-35 | 35.0/17.5 | 35.0±0.8 | 17.5±1.0 | 0.82±0.02 | 25 |
| HTS-40 | 40.0/20.0 | 40.0±1.5 | 20.0±1.0 | 0.82±0.02 | 25 |
| HTS-45 | 45.0/22.5 | 45.0±1.5 | 22.5±1.0 | 0.82±0.02 | 25 |
| HTS-50 | 50.0/25.0 | 50.0±1.5 | 25.0±1.0 | 0.82±0.02 | 25 |
| HTS-60 | 60.0/30.0 | 60.0±1.5 | 30.0±1.5 | 0.92±0.02 | 25 |
| HTS-70 | 70.0/35.0 | 70.0±1.5 | 35.0±1.5 | 0.95±0.02 | 25 |
| HTS-80 | 80.0/40.0 | 80.0±1.5 | 40.0±1.5 | 0.95±0.02 | 25 |
| HTS-90 | 90.0/45.0 | 90.0±1.5 | 45.0±1.5 | 1.10±0.02 | 25 |
| HTS-100 | 100.0/50.0 | 100.0±1.5 | 50.0±1.5 | 1.10±0.02 | 25 |
| HTS-120 | 120.0/60.0 | 120.0±1.5 | 60.0±1.5 | 1.10±0.02 | 25 |
| HTS-150 | 150.0/75.0 | 150.0±1.5 | 75.0±1.5 | 1.15±0.02 | 25 |
| HTS-180 | 180.0/90.0 | 180.0±1.5 | 90.0±1.5 | 1.15±0.02 | 25 |
| HTS-200 | 200.0/100.0 | 200.0±1.5 | 100.0±1.5 | 1.15±0.02 | 25 |

Note: other dimensions can be manufactured upon requested

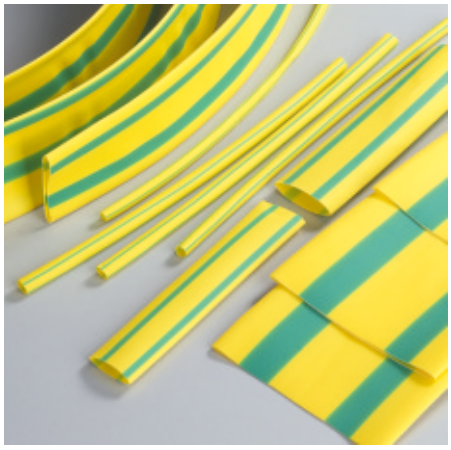

# HTD Type Heat-shrinkable Tube

- HTD series yellow & green shrinkable busing is processed and manufactured with excellent green and yellow polyolefin materials. When the products are shaped, they are cross linked and expanded continuously with electronic accelerator. The products are widely used in the marking of electric wires, earthing of cables, special lines and pipelines.
- Features: application: -55℃~125℃; Initial shrinking temperature: 70℃; Full shrinking temperature: 125℃. Softness, flame retardation bright and durable color, timely delivery and supply, convenient use, able to shrink when heated with oven or hot air gun.
- Standard Color: yellow-green.

| ITEM NO. | SIZE | DIMENSION BEFORE SHRINKING(MM) | DIMENSION AFTER SHRINKING(MM) | | STANDARD PACKAGING (MM) |
|---|---|---|---|---|---|
| | | INTERNAL DIAMETER | MAX INTERNAL DIAMETER | WALL THICKNESS | |
| HTD-2 | 2.0/1.0 | 2.0±0.3 | 1.0±0.1 | 0.25±0.01 | 200 |
| HTD-2.5 | 2.5/1.25 | 2.5±0.3 | 1.25±0.1 | 0.25±0.01 | 200 |
| HTD-3 | 3.0/1.5 | 3.0±0.3 | 1.5±0.1 | 0.30±0.01 | 200 |
| HTD-4 | 4.0/2.0 | 4.0±0.3 | 2.0±0.1 | 0.34±0.01 | 200 |
| HTD-5 | 5.0/2.5 | 5.0±0.3 | 2.5±0.2 | 0.46±0.01 | 100 |
| HTD-6 | 6.0/3.0 | 6.0±0.4 | 3.0±0.2 | 0.46±0.01 | 100 |
| HTD-7 | 7.0/3.5 | 7.0±0.4 | 3.5±0.2 | 0.46±0.01 | 100 |
| HTD-8 | 8.0/4.0 | 8.0±0.4 | 4.0±0.2 | 0.48±0.01 | 100 |
| HTD-10 | 10.0/5.0 | 10.0±0.4 | 5.0±0.2 | 0.52±0.01 | 100 |
| HTD-11 | 11.0/5.5 | 11.0±0.4 | 5.5±0.2 | 0.52±0.01 | 100 |
| HTD-12 | 12.0/6.0 | 12.0±0.4 | 6.0±0.3 | 0.52±0.01 | 100 |
| HTD-13 | 13.0/6.5 | 13.0±0.4 | 6.5±0.3 | 0.54±0.01 | 100 |
| HTD-14 | 14.0/7.0 | 14.0±0.4 | 7.0±0.3 | 0.56±0.01 | 100 |
| HTD-15 | 15.0/7.5 | 15.0±0.4 | 7.5±0.3 | 0.56±0.01 | 100 |
| HTD-16 | 16.0/8.0 | 16.0±0.5 | 8.0±0.3 | 0.62±0.01 | 100 |
| HTD-18 | 18.0/9.0 | 18.0±0.5 | 9.0±0.3 | 0.63±0.02 | 100 |
| HTD-20 | 20.0/10.0 | 20.0±0.5 | 10.0±0.3 | 0.70±0.02 | 100 |
| HTD-22 | 22.0/11.0 | 22.0±0.5 | 11.0±0.3 | 0.72±0.02 | 100 |
| HTD-25 | 25.0/12.5 | 25.0±0.8 | 12.5±1.0 | 0.75±0.02 | 25 |
| HTD-28 | 28.0/14.0 | 28.0±0.8 | 14.0±1.0 | 0.80±0.02 | 25 |
| HTD-30 | 30.0/15.0 | 30.0±0.8 | 15.0±1.0 | 0.80±0.02 | 25 |
| HTD-35 | 35.0/17.5 | 35.0±0.8 | 17.5±1.0 | 0.82±0.02 | 25 |
| HTD-40 | 40.0/20.0 | 40.0±1.5 | 20.0±1.0 | 0.82±0.02 | 25 |
| HTD-50 | 50.0/25.0 | 50.0±1.5 | 25.0±1.0 | 0.82±0.02 | 25 |
| HTD-60 | 60.0/30.0 | 60.0±1.5 | 30.0±1.5 | 0.92±0.02 | 25 |
| HTD-70 | 70.0/35.0 | 70.0±1.5 | 35.0±1.5 | 0.95±0.02 | 25 |
| HTD-80 | 80.0/40.0 | 80.0±1.5 | 40.0±1.5 | 0.95±0.02 | 25 |
| HTD-90 | 90.0/45.0 | 90.0±1.5 | 45.0±1.5 | 1.10±0.02 | 25 |
| HTD-100 | 100.0/50.0 | 100.0±1.0 | 50.0±1.5 | 1.10±0.02 | 25 |
| HTD-120 | 120.0/60.0 | 120.0±1.5 | 60.0±1.5 | 1.10±0.02 | 25 |
| HTD-150 | 150.0/75.0 | 150.0±1.5 | 75.0±1.5 | 1.15±0.02 | 25 |
| HTD-180 | 180.0/90.0 | 180.0±1.5 | 90.0±1.5 | 1.15±0.02 | 25 |

Note: other dimensions can be manufactured upon requested

## Nylon Cable Gland PG Type

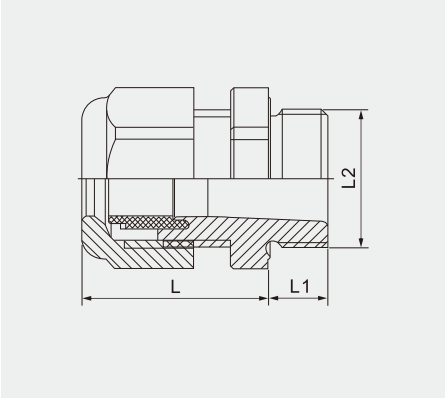


- Material: nylon plastic
- Hermetic seal: nitrile rubber
- Protection degree: IP68-10pressure (rotate position, with o-seal)
- Ambient temperature: quiescent state-40℃ to 100℃ , short time to 120℃ ,dynamic-20℃ to 80℃ ,short time to 100℃
- Supply color: Grey、Black、Other color, please inquiring

CE RoHS

| ITEM NO . | ⌀ mm | L2 mm | L1 mm | L mm | mm |
|---|---|---|---|---|---|
| PG7 | 3-6.5 | 12 | 9 | 22 | 16 |
| PG9 | 4-8 | 15.5 | 9 | 24 | 18 |
| PG11 | 5-10 | 18 | 9 | 26 | 23 |
| PG13.5 | 6-11 | 20.5 | 9 | 28 | 23 |
| PG16 | 10-13 | 22.5 | 10 | 30 | 27 |
| PG19 | 12-15 | 24 | 10 | 30 | 27 |
| PG21 | 13-18 | 28 | 12 | 34 | 33 |
| PG25 | 16-21 | 30 | 12 | 36 | 35 |
| PG29 | 18-25 | 36 | 12 | 38 | 42 |
| PG36 | 22-32 | 45.5 | 15 | 42 | 52 |
| PG42 | 32-38 | 49.5 | 18 | 46 | 58 |
| PG48 | 37-44 | 58 | 18 | 50 | 64 |
| PG63 | 42-50 | - | 27 | 60 | 72 |

## Nylon Cable Gland M Type

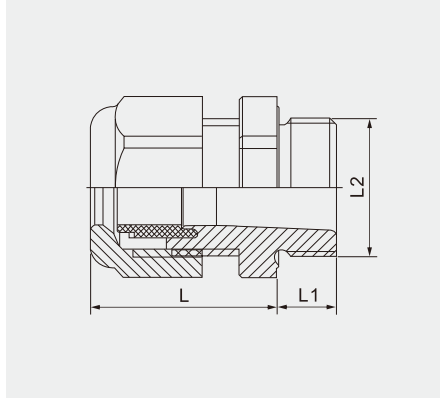


- Material: nylon plastic
- Hermetic seal: nitrile rubber
- Protection degree: IP68-10pressure (rotate position, with o-seal)
- Ambient temperature: quiescent state-40℃ to 100℃ , short time to 120℃ ,dynamic-20℃ to 80℃ ,short time to 100℃
- Supply color: Grey、Black、Other color, please inquiring

CE SGS RoHS

| ITEM NO . | ⌀ mm | L2 mm | L1 mm | L mm | mm |
|---|---|---|---|---|---|
| M12×1. 5 | 3-6.5 | 12 | 9 | 22 | 16 |
| M16×1. 5 | 4-8 | 16 | 9 | 24 | 18 |
| M18×1. 5 | 5-10 | 18 | 9 | 26 | 23 |
| M20×1. 5 | 6-11 | 20 | 9 | 28 | 23 |
| M22×1. 5 | 10-13 | 22 | 10 | 30 | 27 |
| M24×1. 5 | 12-15 | 24 | 10 | 30 | 27 |
| M25×1. 5 | 13-18 | 25 | 12 | 34 | 33 |
| M27×1. 5 | 13-18 | 27 | 12 | 34 | 33 |
| M28×1. 5 | 13-18 | 28 | 12 | 34 | 33 |
| M30×1. 5 | 16-21 | 30 | 12 | 36 | 35 |
| M32×1. 5 | 16-21 | 32 | 11 | 34 | 36 |
| M36×1. 5 | 18-25 | 36 | 12 | 38 | 42 |
| M40×1. 5 | 22-32 | 40 | 15 | 42 | 53 |
| M46×1. 5 | 22-32 | 46 | 15 | 42 | 52 |
| M50×1. 5 | 32-38 | 50 | 18 | 46 | 58 |
| M58×1. 5 | 37-44 | 58 | 18 | 50 | 64 |
| M63×1. 5 | 37-44 | 63 | 18 | 50 | 65 |

## Nylon Cable Gland MG Type

- Plastic cable pack MG
- Material: nylon plastic
- Hermetic seal: nitrile rubber
- Protection degree: IP68-10pressure (rotate position, with o-seal)
- Ambient temperature: quiescent state-40℃ to 100℃ , short time to 120℃ ,dynamic-20℃ to 80℃ ,short time to 100℃
- Supply color: Grey、Black、Other color, please inquiring

CE RoHS

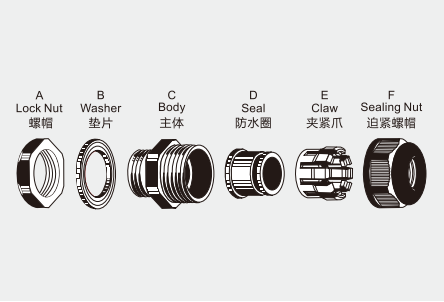


| ITEM NO . | ⌀ mm | C1 mm | C2 mm | mm |
|---|---|---|---|---|
| MG12A | 3-5.3 | 12 | 9 | 17/19 |
| MG16A | 4-7 | 16 | 15 | 22 |
| MG20A | 6-11 | 20 | 15 | 26/27 |
| MG25A | 10-16 | 25 | 15 | 32/33 |
| MG32A | 15-22 | 32 | 15 | 41 |
| MG40A | 20-25 | 40 | 20 | 50 |
| MG50A | 26-32 | 50 | 23 | 60/62 |
| MG63A | 38-46 | 63 | 24 | 73/75 |

H

## Nylon Cable Gland MG Type

- Plastic cable pack NPT
- Material: nylon plastic
- Hermetic seal: nitrile rubber
- Protection degree: IP68-10pressure (rotate position, with o-seal)
- Ambient temperature: quiescent state-40℃ to 100℃ , short time to 120℃ ,dynamic-20℃ to 80℃ ,short time to 100℃
- Supply color: Grey、Black、Other color, please inquiring

CE RoHS

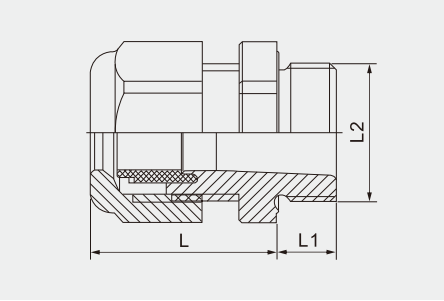


| ITEM NO . | ⌀ mm | L2 mm | L1 mm | L mm | mm |
|---|---|---|---|---|---|
| 3/8"NPT | 4-8 | 15.5 | 15 | 24 | 18 |
| 1/2"NPT | 6-11 | 20.5 | 15 | 28 | 23 |
| 3/4"NPT | 13-18 | 28 | 15 | 34 | 33 |
| 1"NPT | 18-25 | 36 | 15 | 38 | 42 |
| NPT1 1/4 | 22-32 | 45.5 | 18 | 42 | 52 |

## Metal Cable Gland PG Type
## Metal Cable Gland M/M-length

- Material: brass nickle-plated
- Fixrue pack:nylon plastic
- Hermetic seal: nitirile rubber
- O-seal cirde:nitirile rubber
- Protection degree:IP68-10 pressure(rotate position)
- Ambient temperature;-40℃ to 100℃ short time to 120℃

CE SGS RoHS

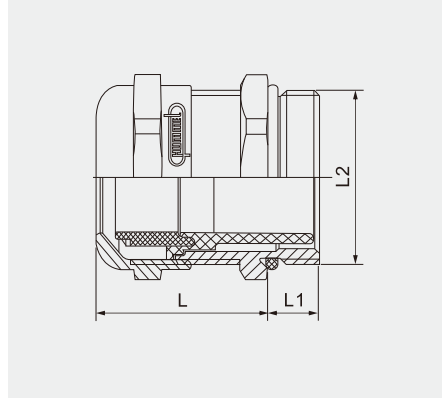


| ITEM NO . | | ⌀ mm | L1 mm | L2 mm | L mm | mm |
|---|---|---|---|---|---|---|
| PG7 | M12×1.5 | 3-6.5 | 5 | 10 | 19 | 14 |
| PG9 | M16×1.5 | 4-8 | 6 | 10 | 20 | 17 |
| PG11 | M18×1.5 | 5-10 | 6 | 10 | 21 | 20 |
| PG13.5 | M20×1.5 | 6-12 | 6.5 | 10 | 22 | 22 |
| PG16 | M22×1.5 | 10-14 | 6.5 | 10 | 23 | 24 |
| PG21 | M25×1.5 | 13-18 | 7 | 12 | 25 | 30 |
| PG29 | M32×1.5 | 18-25 | 8 | 12 | 29 | 40 |
| PG36 | M40×1.5 | 22-32 | 8 | 15 | 35 | 50 |
| PG42 | M50×1.5 | 32-38 | 9 | 15 | 37 | 57 |
| PG48 | M63×1.5 | 37-44 | 10 | 15 | 38 | 64 |

H

## Metal Cable Gland NPT Type

**NPT Metal Cable Gland**

- Material: brass nickle-plated
- Fixrue pack:nylon plastic
- Hermetic seal: nitirile rubber
- O-seal cirde:nitirile rubber
- Protection degree:IP68-10 pressure(rotate position)
- Ambient temperature;-40℃ to 100℃ short time to 120℃
- Other screw thread specification (PF、BSP、PS、NPT) Please inquing

CE SGS RoHS

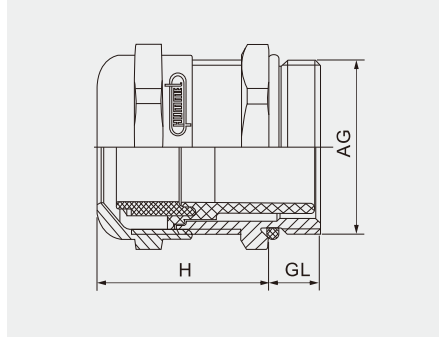


| ITEM NO . | ⌀ mm | GL mm | H mm | mm | AG |
|---|---|---|---|---|---|
| 3/8"NPT | 4-8 | 15 | 20 | 17/19 | 17 |
| 1/2"NPT | 6-12 | 13 | 22 | 22/24 | 21.2 |
| 3/4"NPT | 13-18 | 13 | 25 | 30/33 | 26.2 |
| 1"NPT | 18-25 | 19 | 29 | 40/41 | 33.3 |
| 1-1/4" NPT | 18-25 | 18 | 29 | 40/50 | 42 |

# 銅管端子
# Copper Tube Terminals

www.cnhowder.com

## SC Copper Tube Terminals

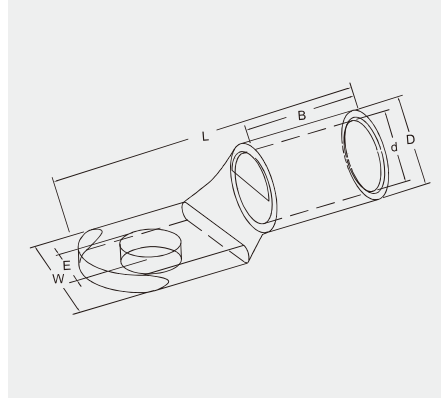


CE SGS RoHS

| ITEM NO. | φd(mm) | φE(mm) | φD(mm) | W(mm) | B(mm) | L(mm) |
|---|---|---|---|---|---|---|
| SC6-4 | 3.8 | 4.2 | 5.5 | 10.0 | 9.0 | 24.0 |
| SC6-5 | | 5.2 | | 10.0 | | 24.0 |
| SC6-6 | | 6.5 | | 12.0 | | 24.0 |
| SC6-8 | | 8.4 | | 12.5 | | 26.0 |
| SC6-10 | 4.0 | 10.5 | 6.0 | 15.0 | | 28.0 |
| SC10-5 | 4.5 | 5.2 | 6.2 | 12.0 | 9.0 | 25.0 |
| SC10-6 | | 6.5 | | 12.0 | | 25.0 |
| SC10-8 | | 8.4 | | 12.5 | | 27.0 |
| SC10-10 | | 10.5 | | 15.0 | | 29.0 |
| SC10-12 | | 13.0 | | 17.0 | | 31.0 |
| SC16-5 | 5.4 | 5.2 | 7.1 | 12.0 | 12.0 | 30.0 |
| SC16-6 | | 6.5 | | 12.0 | | 30.0 |
| SC16-8 | | 8.4 | | 12.5 | | 30.0 |
| SC16-10 | | 10.5 | | 16.0 | | 33.0 |
| SC16-12 | | 13.0 | | 17.0 | | 35.0 |
| SC25-5 | 6.8 | 5.2 | 8.8 | 13.0 | 12.0 | 33.0 |
| SC25-6 | | 6.5 | | 13.0 | | 33.0 |
| SC25-8 | | 8.4 | | 15.0 | | 33.0 |
| SC25-10 | | 10.5 | | 18.0 | | 34.0 |
| SC25-12 | | 13.0 | | 18.0 | | 35.0 |
| SC25-14 | | 15.0 | | 20.0 | | 38.0 |
| SC35-5 | 8.2 | 5.2 | 10.6 | 16.0 | 14.0 | 38.0 |
| SC35-6 | | 6.5 | | 16.0 | | 38.0 |
| SC35-8 | | 8.4 | | 16.0 | | 38.0 |
| SC35-10 | | 10.5 | | 18.0 | | 39.0 |
| SC35-12 | | 13.0 | | 19.0 | | 40.5 |
| SC35-14 | | 15.0 | | 20.0 | | 42.0 |
| SC50-6 | 9.5 | 6.5 | 12.4 | 17.8 | 16.0 | 45.0 |
| SC50-8 | | 8.4 | | 17.8 | | 45.0 |
| SC50-10 | | 10.5 | | 17.8 | | 45.0 |
| SC50-12 | | 13.0 | | 20.0 | | 45.0 |
| SC50-14 | | 15.0 | | 22.0 | | 46.0 |
| SC50-16 | | 17.0 | | 24.0 | | 47.0 |
| SC70-8 | 11.2 | 8.4 | 14.7 | 21.0 | 20.0 | 52.0 |
| SC70-10 | | 10.5 | | 21.0 | | 52.0 |
| SC70-12 | | 13.0 | | 21.0 | | 52.0 |
| SC70-14 | | 15.0 | | 21.0 | | 52.0 |
| SC70-16 | | 17.0 | | 25.0 | | 52.0 |
| SC95-8 | 13.5 | 8.4 | 17.4 | 25.0 | 23.0 | 58.0 |
| SC95-10 | | 10.5 | | 25.0 | | 58.0 |
| SC95-12 | | 13.0 | | 25.0 | | 58.0 |
| SC95-14 | | 15.0 | | 25.0 | | 58.0 |
| SC95-16 | | 17.0 | | 25.0 | | 58.0 |

## SC Copper Tube Terminals

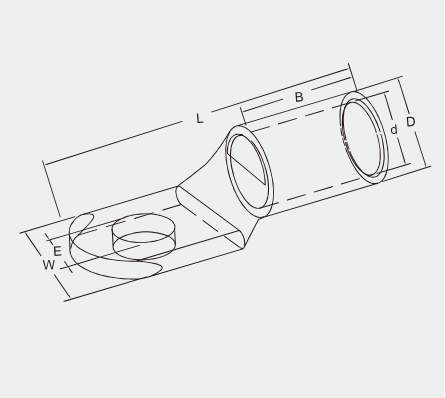


CE SGS RoHS

| ITEM NO. | φd(mm) | φE(mm) | φD(mm) | W(mm) | B(mm) | L(mm) |
|---|---|---|---|---|---|---|
| SC120-8 | 15 | 8.4 | 19.4 | 28.0 | 22.0 | 63.0 |
| SC120-10 | | 10.5 | | | | |
| SC120-12 | | 13.0 | | | | |
| SC120-14 | | 15.0 | | | | |
| SC120-16 | | 17.0 | | | | |
| SC120-20 | | 21.0 | | | | |
| SC150-8 | 16.5 | 8.4 | 21.2 | 30.5 | 26.0 | 70.0 |
| SC150-10 | | 10.5 | | | | |
| SC150-12 | | 13.0 | | | | |
| SC150-14 | | 15.0 | | | | |
| SC150-16 | | 17.0 | | | | |
| SC150-20 | | 21.0 | | | | |
| SC185-10 | 18.5 | 10.5 | 23.5 | 34.0 | 32.0 | 75.0 |
| SC185-12 | | 13.0 | | | | |
| SC185-14 | | 15.0 | | | | |
| SC185-16 | | 17.0 | | | | |
| SC185-20 | | 21.0 | | | | |
| SC240-10 | 21 | 10.5 | 26.5 | 38.5 | 38.0 | 90.0 |
| SC240-12 | | 13.0 | | | | |
| SC240-14 | | 15.0 | | | | |
| SC240-16 | | 17.0 | | | | |
| SC240-18 | | 19.0 | | | | |
| SC240-20 | | 21.0 | | | | |
| SC300-10 | 23.5 | 10.5 | 30.0 | 43.0 | 42.0 | 98.0 |
| SC300-12 | | 13.0 | | | | |
| SC300-14 | | 15.0 | | | | |
| SC300-16 | | 17.0 | | | | |
| SC300-20 | | 21.0 | | | | |
| SC400-10 | 28.5 | 10.5 | 36.5 | 52.0 | 44.0 | 110.0 |
| SC400-12 | | 13.0 | | | | |
| SC400-14 | | 15.0 | | | | |
| SC400-16 | | 17.0 | | | | |
| SC400-20 | | 21.0 | | | | |
| SC500-10 | 30 | 10.5 | 39.0 | 56.0 | 48.0 | 120.0 |
| SC500-12 | | 13.0 | | | | |
| SC500-14 | | 15.0 | | | | |
| SC500-16 | | 17.0 | | | | |
| SC500-20 | | 21.0 | | | | |
| SC630-10 | 35 | 10.5 | 45.0 | 65.0 | 56.0 | 140.0 |
| SC630-12 | | 13.0 | | | | |
| SC630-14 | | 15.0 | | | | |
| SC630-16 | | 17.0 | | | | |
| SC630-20 | | 21.0 | | | | |

# T Copper Tube Terminals

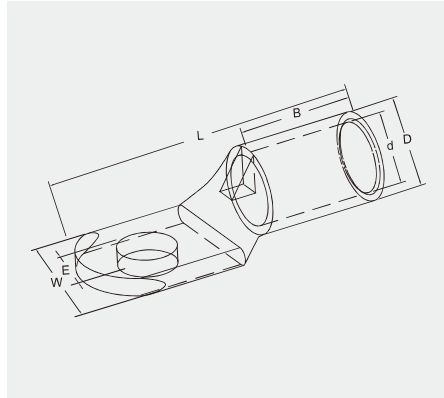


CE SGS RoHS

| ITEM NO. | φd(mm) | φE(mm) | φD(mm) | W(mm) | B(mm) | L(mm) |
|---|---|---|---|---|---|---|
| T1.5-4 | 2.4 | 4.3 | 4.0 | 8.7 | 7.0 | 19.0 |
| T1.5-5 | | 5.3 | | 8.7 | | 19.0 |
| T1.5-6 | | 6.4 | | 10.0 | | 20.0 |
| T2.5-4 | 2.7 | 4.3 | 4.3 | 8.7 | 7.0 | 19.0 |
| T2.5-5 | | 5.3 | | 8.7 | | 19.0 |
| T2.5-6 | | 6.4 | | 10.3 | | 21.0 |
| T2.5-8 | | 8.3 | | 12.0 | | 23.0 |
| T4-4 | 3.1 | 4.3 | 4.8 | 8.7 | 9.5 | 21.5 |
| T4-5 | | 5.3 | | 8.7 | | 21.5 |
| T4-6 | | 6.4 | | 10.3 | | 23.5 |
| T4-8 | | 8.3 | | 12.5 | | 28.5 |
| T6-4 | 3.8 | 4.3 | 5.5 | 10.3 | 10.0 | 26.0 |
| T6-5 | | 5.3 | | 10.3 | | 26.0 |
| T6-6 | | 6.4 | | 10.3 | | 26.0 |
| T6-8 | | 8.3 | | 13.9 | | 29.0 |
| T6-10 | | 10.5 | | 13.9 | | 29.0 |
| T10-4 | 4.7 | 4.3 | 6.9 | 11.9 | 11.5 | 27.5 |
| T10-5 | | 5.3 | | 11.9 | | 27.5 |
| T10-6 | | 6.4 | | 11.9 | | 27.5 |
| T10-8 | | 8.3 | | 13.5 | | 30.5 |
| T10-10 | | 10.5 | | 15.0 | | 30.5 |
| T10-12 | | 13.2 | | 17.0 | | 34.0 |
| T16-5 | 5.6 | 5.3 | 7.8 | 12.0 | 12.0 | 27.5 |
| T16-6 | | 6.4 | | 12.0 | | 27.5 |
| T16-8 | | 8.3 | | 13.5 | | 31.0 |
| T16-10 | | 10.5 | | 16.0 | | 32.0 |
| T16-12 | | 13.2 | | 17.0 | | 37.5 |
| T25-6 | 7.1 | 6.4 | 9.5 | 14.0 | 13.5 | 34.0 |
| T25-8 | | 8.3 | | 14.0 | | 34.0 |
| T25-10 | | 10.5 | | 16.0 | | 37.0 |
| T25-12 | | 13.2 | | 18.0 | | 40.0 |
| T35-6 | 8.2 | 6.4 | 11.0 | 16.5 | 16.0 | 39.0 |
| T35-8 | | 8.3 | | 16.5 | | 39.0 |
| T35-10 | | 10.5 | | 16.5 | | 43.0 |
| T35-12 | | 13.2 | | 18.0 | | 43.0 |
| T35-14 | | 14.5 | | 20.0 | | 48.0 |
| T35-16 | | 16.5 | | 23.0 | | 48.0 |
| T40-6 | 9.0 | 6.4 | 11.2 | 17.0 | 17.0 | 44.0 |
| T40-8 | | 8.3 | | 17.0 | | 44.0 |
| T40-10 | | 10.5 | | 17.0 | | 44.0 |
| T40-12 | | 13.2 | | 18.0 | | 44.0 |
| T50-6 | 9.5 | 6.4 | 12.5 | 18.0 | 20.0 | 45.0 |
| T50-8 | | 8.3 | | 18.0 | | 45.0 |
| T50-10 | | 10.5 | | 18.0 | | 49.0 |
| T50-12 | | 13.2 | | 18.0 | | 49.0 |
| T50-14 | | 14.5 | | 22.0 | | 54.0 |
| T50-16 | | 16.5 | 14.0 | 25.0 | 23.0 | 62.0 |
| T50-20 | | 21.0 | | 30.0 | | 68.0 |
| T70-8 | 11.5 | 8.3 | 15.0 | 22.0 | 20.0 | 47.6 |
| T70-10 | | 10.6 | | 22.0 | | 51.6 |
| T70-12 | | 13.2 | | 22.0 | | 51.6 |

## T Copper Tube Terminals

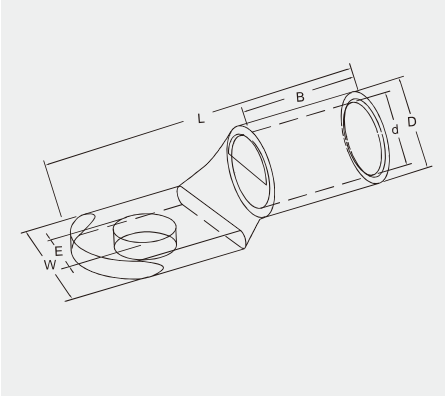


CE SGS RoHS

| ITEM NO. | φd(mm) | φE(mm) | φD(mm) | W(mm) | B(mm) | L(mm) |
|---|---|---|---|---|---|---|
| T70-14 | 11.5 | 14.5 | 15.0 | 22.0 | 20.0 | 62.6 |
| T70-16 | | 16.5 | | | | |
| T70-20 | | 21.0 | | 30.0 | | |
| T95-8 | 13.5 | 8.3 | 17.0 | 25.0 | 22.0 | 55.8 |
| T95-10 | | 10.5 | | | | |
| T95-12 | | 13.2 | | | | |
| T95-14 | | 14.5 | | | | 66.8 |
| T95-16 | | 16.5 | | | | |
| T95-20 | | 21.0 | | 28.0 | | |
| T120-10 | 15.6 | 10.5 | 20.0 | 29.0 | 27.0 | 71.5 |
| T120-12 | | 13.2 | | | | |
| T120-14 | | 14.5 | | | | |
| T120-16 | | 16.5 | | | | |
| T120-20 | | 21.0 | | | | |
| T150-10 | 16.5 | 10.5 | 21.0 | 30.6 | 32.0 | 78.0 |
| T150-12 | | 13.2 | | | | |
| T150-14 | | 14.5 | | | | |
| T150-16 | | 16.5 | | | | |
| T150-20 | | 21.0 | | | | |
| T185-10 | 18.4 | 10.5 | 23.6 | 34.0 | 34.0 | 84.0 |
| T185-12 | | 13.2 | | | | |
| T185-14 | | 14.5 | | | | |
| T185-16 | | 16.5 | | | | |
| T185-20 | | 21.0 | | | | |
| T240-10 | 21.2 | 10.5 | 26.4 | 38.5 | 37.0 | 90.0 |
| T240-12 | | 13.2 | | | | |
| T240-14 | | 14.5 | | | | |
| T240-16 | | 16.5 | | | | |
| T240-20 | | 21.0 | | | | |
| T300-10 | 23.4 | 10.5 | 28.6 | 42.0 | 40.0 | 96.0 |
| T300-12 | | 13.2 | | | | |
| T300-14 | | 14.5 | | | | |
| T300-16 | | 16.5 | | | | |
| T300-20 | | 21.0 | | | | |
| T400-10 | 26.8 | 10.5 | 32.8 | 48.0 | 37.0 | 104.7 |
| T400-12 | | 13.2 | | | | |
| T400-14 | | 14.5 | | | | |
| T400-16 | | 16.5 | | | | |
| T400-20 | | 21.0 | | | | |
| T500-10 | 29.8 | 10.5 | 38.4 | 55.0 | 46.5 | 115.5 |
| T500-12 | | 13.2 | | | | |
| T500-14 | | 14.5 | | | | |
| T500-16 | | 16.5 | | | | |
| T500-20 | | 21.0 | | | | |
| T630-10 | 34.5 | 10.5 | 44.7 | 64.0 | 50.0 | 133.1 |
| T630-12 | | 13.2 | | | | |
| T630-14 | | 14.5 | | | | |
| T630-16 | | 16.5 | | | | |
| T630-20 | | 21.0 | | | | |

## JM Copper Tube Terminals

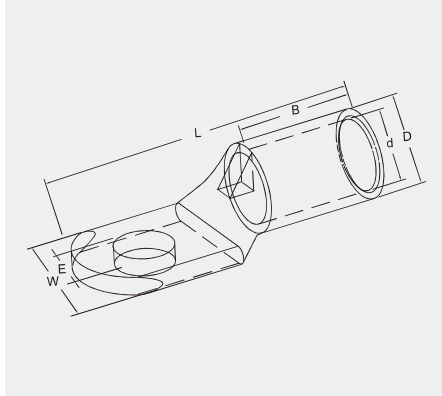


CE SGS RoHS

| ITEM NO. | φd(mm) | φE(mm) | φD(mm) | W(mm) | B(mm) | L(mm) |
|---|---|---|---|---|---|---|
| JM2.5-4 | 2.6 | 4.2 | 3.9 | 8.7 | 7.0 | 20.0 |
| JM2.5-6 | | 6.5 | | 10.0 | | 20.0 |
| JM4-4 | 3.2 | 4.2 | 4.4 | 10.0 | 8.0 | 22.0 |
| JM4-5 | | 5.2 | | 10.0 | | 22.0 |
| JM4-6 | | 6.5 | | 10.0 | | 22.0 |
| JM6-5 | 3.7 | 5.2 | 5.5 | 10.0 | 10.0 | 24.0 |
| JM6-6 | | 6.5 | | 12.0 | | 24.0 |
| JM6-8 | | 8.4 | | 12.5 | | 24.0 |
| JM10-5 | 4.5 | 5.2 | 6.2 | 12.0 | 10.0 | 27.0 |
| JM10-6 | | 6.5 | | 12.0 | | 27.0 |
| JM10-8 | | 8.4 | | 12.5 | | 27.0 |
| JM10-10 | | 10.3 | | 15.0 | | 29.0 |
| JM16-6 | 5.7 | 6.5 | 7.3 | 12.0 | 12.0 | 30.0 |
| JM16-8 | | 8.4 | | 12.5 | | 30.0 |
| JM16-10 | | 10.5 | | 16.0 | | 32.0 |
| JM16-12 | | 13.0 | | 17.0 | | 32.0 |
| JM25-6 | 7.2 | 6.5 | 8.8 | 13.0 | 15.0 | 34.0 |
| JM25-8 | | 8.4 | | 15.0 | | 34.0 |
| JM25-10 | | 10.5 | | 16.0 | | 34.0 |
| JM25-12 | | 13.0 | | 18.0 | | 36.0 |
| JM35-6 | 8.5 | 6.5 | 10.6 | 16.0 | 16.0 | 38.0 |
| JM35-8 | | 8.4 | | 16.0 | | 38.0 |
| JM35-10 | | 10.5 | | 16.0 | | 38.0 |
| JM35-12 | | 13.0 | | 18.0 | 15.0 | 38.0 |
| JM50-6 | 9.8 | 6.5 | 12.3 | 18.0 | 19.0 | 44.0 |
| JM50-8 | | 8.4 | | 18.0 | | 44.0 |
| JM50-10 | | 10.5 | | 18.0 | | 44.0 |
| JM50-12 | | 13.0 | | 20.0 | | 44.0 |
| JM70-8 | 11.5 | 8.4 | 14.2 | 21.0 | 22.0 | 50.0 |
| JM70-10 | | 10.5 | | 21.0 | | 50.0 |
| JM70-12 | | 13.0 | | 21.0 | | 50.0 |
| JM70-14 | | 14.5 | | 21.0 | | 50.0 |

## JM Copper Tube Terminals

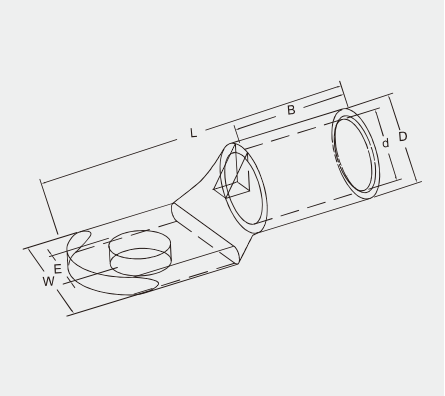


CE SGS RoHS

| ITEM NO. | φd(mm) | φE(mm) | φD(mm) | W(mm) | B(mm) | L(mm) |
|---|---|---|---|---|---|---|
| JM95-10 | 13.7 | 10.5 | 16.7 | 25.0 | 25.0 | 57.0 |
| JM95-12 | | 13.0 | | | | |
| JM95-14 | | 14.5 | | | | |
| JM120-10 | 15.0 | 10.5 | 18.6 | 27.0 | 26.0 | 63.5 |
| JM120-12 | | 13.0 | | | | |
| JM120-14 | | 14.7 | | | | |
| JM120-16 | | 17.0 | | | | |
| JM150-10 | 16.7 | 10.5 | 20.6 | 30.0 | 30.0 | 71.0 |
| JM150-12 | | 13.0 | | | | |
| JM150-14 | | 14.7 | | | | |
| JM150-16 | | 17.0 | | | | |
| JM185-12 | 18.5 | 13.0 | 22.6 | 34.0 | 32.0 | 79.0 |
| JM185-14 | | 14.7 | | | | |
| JM185-16 | | 17.0 | | | | |
| JM240-12 | 21.0 | 13.0 | 25.6 | 38.0 | 40.0 | 92.0 |
| JM240-14 | | 14.7 | | | | |
| JM240-16 | | 17.0 | | | | |
| JM240-20 | | 21.0 | | | | |
| JM300-12 | 24.0 | 13.0 | 29.5 | 43.0 | 44.0 | 102.0 |
| JM300-14 | | 14.7 | | | | |
| JM300-16 | | 17.0 | | | | |
| JM300-20 | | 21.0 | | | | |
| JM400-12 | 27.0 | 13.0 | 33.4 | 48.5 | 50.0 | 113.0 |
| JM400-14 | | 14.7 | | | | |
| JM400-16 | | 17.0 | | | | |
| JM400-20 | | 21.0 | | | | |
| JM500-14 | 30.0 | 14.7 | 37.3 | 55.0 | 50.0 | 123.0 |
| JM500-16 | | 17.0 | | | | |
| JM500-20 | | 21.0 | | | | |
| JM630-16 | 35.0 | 17.0 | 44.1 | 65.0 | 65.0 | 135.0 |
| JM630-18 | | 19.0 | | | | |
| JM630-20 | | 21.0 | | | | |

# T45° Copper Tube Terminals

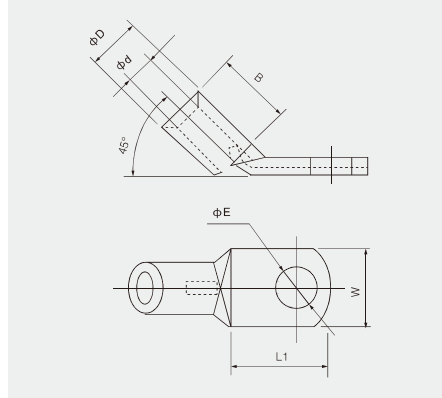


CE SGS RoHS

| ITEM NO. | φd(mm) | φE(mm) | φD(mm) | W(mm) | B(mm) | L1(mm) |
|---|---|---|---|---|---|---|
| T45-10/6 | 4.7 | 6.4 | 6.9 | 11.9 | 10.0 | 12.5 |
| T45-10/8 | | 8.3 | | 13.5 | | 15.5 |
| T45-16/6 | 5.6 | 6.4 | 7.8 | 11.9 | 11.0 | 12.0 |
| T45-16/8 | | 8.3 | | 13.5 | | 15.5 |
| T45-25/8 | 7.1 | 8.3 | 9.5 | 14.0 | 13.0 | 16.0 |
| T45-25/10 | | 10.5 | | 16.0 | | 19.0 |
| T45-35/8 | 8.2 | 8.3 | 11.0 | 16.5 | 16.0 | 18.0 |
| T45-35/10 | | 10.5 | | 16.5 | | 22.0 |
| T45-50/10 | 9.5 | 10.5 | 12.5 | 17.9 | 19.0 | 22.0 |
| T45-50/12 | | 13.0 | | 17.9 | | 22.0 |
| T45-70/10 | 11.5 | 10.5 | 15.0 | 21.5 | 21.0 | 22.0 |
| T45-70/12 | | 13.0 | | 21.5 | | 22.0 |
| T45-95/14 | 13.5 | 14.5 | 17.0 | 24.7 | 24.0 | 33.0 |
| T45-95/16 | | 16.5 | | 24.7 | | 33.0 |
| T45-120/14 | 15.6 | 14.5 | 20.0 | 28.9 | 27.0 | 33.0 |
| T45-120/16 | | 16.5 | | 28.9 | | 33.0 |
| T45-150/14 | 16.5 | 14.5 | 21.0 | 30.4 | 32.0 | 33.0 |
| T45-150/16 | | 16.5 | | 30.4 | | 33.0 |
| T45-185/16 | 18.4 | 16.5 | 23.6 | 34.0 | 34.0 | 35.0 |
| T45-240/16 | 21.2 | 16.5 | 26.4 | 38.5 | 38.0 | 35.0 |
| S-T45-10/6 | 4.7 | 6.4 | 6.8 | 11.9 | 10.0 | 13.0 |
| S-T45-10/8 | | 8.3 | | 15.0 | | 16.0 |
| S-T45-16/6 | 5.6 | 6.4 | 7.8 | 11.9 | 11.0 | 13.0 |
| S-T45-16/8 | | 8.3 | | 15.0 | | 15.5 |
| S-T45-25/8 | 7.1 | 8.3 | 9.4 | 15.0 | 13.0 | 16.0 |
| S-T45-25/10 | | 10.5 | | 18.0 | | 21.0 |
| S-T45-35/8 | 8.7 | 8.3 | 11.3 | 16.0 | 16.0 | 17.0 |
| S-T45-35/10 | | 10.5 | | 19.0 | | 21.0 |
| S-T45-50/10 | 9.8 | 10.5 | 12.6 | 20.0 | 19.0 | 21.0 |
| S-T45-50/12 | | 13.0 | | 21.0 | | 25.0 |
| S-T45-70/10 | 11.5 | 10.5 | 17.7 | 21.5 | 21.0 | 21.0 |
| S-T45-70/12 | | 13.0 | | 21.5 | | 23.0 |
| S-T45-95/14 | 13.5 | 14.5 | 16.9 | 24.7 | 24.0 | 28.0 |
| S-T45-95/16 | | 16.5 | | 27.0 | | 31.0 |
| S-T45-120/14 | 15.6 | 14.5 | 19.9 | 26.5 | 26.5 | 30.0 |
| S-T45-120/16 | | 16.5 | | 28.9 | | 33.0 |
| S-T45-150/14 | 16.5 | 14.5 | 20.9 | 30.4 | 32.0 | 34.0 |
| S-T45-150/16 | | 16.5 | | 30.4 | | 34.0 |
| S-T45-185/16 | 18.8 | 16.5 | 23.7 | 34.0 | 34.0 | 35.0 |
| S-T45-240/16 | 21.2 | 16.5 | 26.2 | 38.4 | 38.0 | 35.0 |

## AWG Copper Tube Terminals

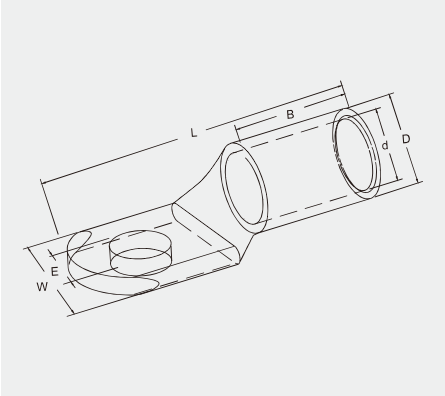


CE SGS RoHS

| ITEM NO. | φd(mm) | φE(mm) | φD(mm) | W(mm) | B(mm) | L(mm) |
|---|---|---|---|---|---|---|
| 8#10 | 4.8 | 5.1 | 7.1 | 11.8 | 13.0 | 33.3 |
| 8*1/4 | | 6.8 | | 11.8 | | 33.3 |
| 8*5/16 | | 8.3 | | 11.8 | | 33.3 |
| 8*3/8 | | 10.4 | | 14.5 | | 33.3 |
| 8*1/2 | | 13.1 | | 17.0 | | 33.3 |
| 6#10 | 5.9 | 5.1 | 8.1 | 11.8 | 15.0 | 37.3 |
| 6*1/4 | | 6.8 | | 13.7 | | 37.3 |
| 6*5/16 | | 8.3 | | 13.7 | | 37.3 |
| 6*3/8 | | 10.4 | | 13.7 | | 37.3 |
| 6*1/2 | | 13.1 | | 17.0 | 14.0 | 37.3 |
| 4*1/4 | 7.3 | 6.8 | 9.5 | 13.8 | 15.5 | 38.9 |
| 4*5/16 | | 8.3 | | 13.8 | | 38.9 |
| 4*3/8 | | 10.4 | | 14.5 | | 38.9 |
| 4*1/2 | | 13.1 | | 17.0 | 15.0 | 38.9 |
| 2*1/4 | 8.5 | 6.8 | 11.1 | 16.5 | 16.0 | 41.1 |
| 2*5/16 | | 8.3 | | 16.5 | | 41.1 |
| 2*3/8 | | 10.4 | | 16.5 | | 41.1 |
| 2*1/2 | | 13.1 | | 17.0 | 15.3 | 41.1 |
| 1*1/4 | 9.1 | 6.8 | 11.7 | 16.4 | 16.0 | 43.6 |
| 1*5/16 | | 8.3 | | 16.4 | | 43.6 |
| 1*3/8 | | 10.4 | | 17.1 | | 43.6 |
| 1*1/2 | | 13.1 | | 19.1 | | 43.6 |
| 1/0 1/4 | 10.4 | 6.8 | 13.0 | 18.4 | 19.0 | 46.8 |
| 1/0 5/16 | | 8.3 | | 18.4 | | 46.8 |
| 1/0 3/8 | | 10.4 | | 18.4 | | 46.8 |
| 1/0 1/2 | | 13.1 | | 21.0 | | 46.8 |
| 2/0 1/4 | 11.7 | 6.8 | 14.2 | 21.0 | 22.0 | 52.4 |
| 2/0 5/16 | | 8.3 | | 21.0 | | 52.4 |
| 2/0 3/8 | | 10.4 | | 21.0 | | 52.4 |
| 2/0 1/2 | | 13.1 | | 21.0 | 21.0 | 52.4 |
| 3/0 5/16 | 13.0 | 8.3 | 15.7 | 23.1 | 22.5 | 55.9 |
| 3/0 3/8 | | 10.4 | | 23.1 | | 55.9 |
| 3/0 1/2 | | 13.1 | | 23.1 | | 55.9 |
| 4/0 5/16 | 14.2 | 8.3 | 17.2 | 25.8 | 24.0 | 60.5 |
| 4/0 3/8 | | 10.4 | | 25.8 | | 60.5 |
| 4/0 1/2 | | 13.1 | | 25.8 | | 60.5 |

## DIN46235 Copper Tube Terminals

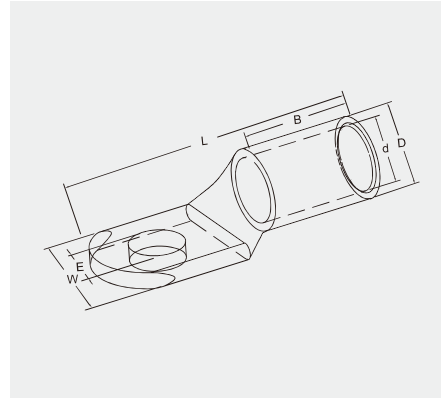


CE SGS RoHS

| ITEM NO. | φd(mm) | φE(mm) | φD(mm) | W(mm) | B(mm) | L(mm) |
|---|---|---|---|---|---|---|
| DIN6-5 | 3.8 | 5.3 | 5.5 | 8.5 | 10.0 | 30.5 |
| DIN6-6 | | 6.4 | | 8.5 | | 31.5 |
| DIN6-8 | | 8.4 | | 13.0 | | 34.0 |
| DIN10-5 | 4.5 | 5.3 | 6.0 | 9.0 | 10.0 | 34.0 |
| DIN10-6 | | 6.4 | | 9.0 | | 34.5 |
| DIN10-8 | | 8.4 | | 13.0 | | 37.0 |
| DIN10-10 | | 10.5 | | 15.0 | | 39.0 |
| DIN16-6 | 5.5 | 6.4 | 8.5 | 13.0 | 20.0 | 43.5 |
| DIN16-8 | | 8.4 | | 13.0 | | 46.0 |
| DIN16-10 | | 10.5 | | 17.0 | | 48.0 |
| DIN16-12 | | 13.0 | | 18.0 | | 49.0 |
| DIN25-6 | 7.0 | 6.4 | 10.0 | 14.0 | 20.0 | 45.5 |
| DIN25-8 | | 8.4 | | 16.0 | | 48.0 |
| DIN25-10 | | 10.5 | | 17.0 | | 50.0 |
| DIN25-12 | | 13.0 | | 19.0 | | 51.0 |
| DIN35-6 | 8.2 | 6.4 | 12.5 | 17.0 | 20.0 | 49.5 |
| DIN35-8 | | 8.4 | | 17.0 | | 52.0 |
| DIN35-10 | | 10.5 | | 19.0 | | 54.0 |
| DIN35-12 | | 13.0 | | 21.0 | | 55.0 |
| DIN35-14 | | 15.0 | | 21.0 | | 56.5 |
| DIN50-8 | 10.0 | 8.4 | 14.5 | 20.0 | 28.0 | 62.0 |
| DIN50-10 | | 10.5 | | 22.0 | | 64.0 |
| DIN50-12 | | 13.0 | | 24.0 | | 65.0 |
| DIN50-14 | | 15.0 | | 24.0 | | 66.5 |
| DIN50-16 | | 17.0 | | 28.0 | | 68.0 |
| DIN70-8 | 11.5 | 8.4 | 16.5 | 24.0 | 28.0 | 65.0 |
| DIN70-10 | | 10.5 | | 24.0 | | 67.0 |
| DIN70-12 | | 13.0 | | 24.0 | | 68.0 |
| DIN70-14 | | 15.0 | | 24.0 | | 69.5 |
| DIN70-16 | | 17.0 | | 30.0 | | 71.0 |
| DIN95-8 | 13.5 | 8.4 | 19.0 | 28.0 | 35.0 | 77.0 |
| DIN95-10 | | 10.5 | | 28.0 | | 77.0 |
| DIN95-12 | | 13.0 | | 28.0 | | 78.0 |
| DIN95-14 | | 15.0 | | 28.0 | | 79.5 |
| DIN95-16 | | 17.0 | | 32.0 | | 81.0 |

## DIN46235 Copper Tube Terminals

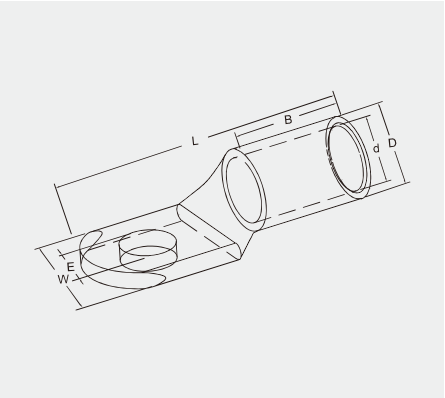


CE SGS RoHS

| ITEM NO. | φd(mm) | φE(mm) | φD(mm) | W(mm) | B(mm) | L(mm) |
|---|---|---|---|---|---|---|
| DIN120-10 | 15.5 | 5.3 | 21.0 | 30.0 | 35.0 | 85.0 |
| DIN120-12 | | 6.4 | | 30.0 | | 86.0 |
| DIN120-14 | | 8.4 | | 30.0 | | 88.0 |
| DIN120-16 | | 5.3 | | 30.0 | | 89.0 |
| DIN120-20 | | 6.4 | | 38.0 | | 91.0 |
| DIN150-10 | 17.0 | 8.4 | 23.5 | 34.0 | 35.0 | 93.0 |
| DIN150-12 | | 10.5 | | 34.0 | | 94.0 |
| DIN150-14 | | 6.4 | | 34.0 | | 97.0 |
| DIN150-16 | | 8.4 | | 34.0 | | 97.0 |
| DIN150-20 | | 10.5 | | 40.0 | | 99.0 |
| DIN185-10 | 19.0 | 13.0 | 25.5 | 37.0 | 40.0 | 97.0 |
| DIN185-12 | | 6.4 | | 37.0 | | 98.0 |
| DIN185-14 | | 8.4 | | 37.0 | | 101.0 |
| DIN185-16 | | 10.5 | | 37.0 | | 101.0 |
| DIN185-20 | | 13.0 | | 40.0 | | 103.0 |
| DIN240-12 | 21.5 | 6.4 | 29.0 | 42.0 | 40.0 | 108.0 |
| DIN240-14 | | 8.4 | | 42.0 | | 111.0 |
| DIN240-16 | | 10.5 | | 42.0 | | 111.0 |
| DIN240-20 | | 13.0 | | 45.0 | | 113.0 |
| DIN300-12 | 24.5 | 15.0 | 32.0 | 46.0 | 50.0 | 119.0 |
| DIN300-14 | | 8.4 | | 46.0 | | 119.0 |
| DIN300-16 | | 10.5 | | 46.0 | | 119.0 |
| DIN300-20 | | 13.0 | | 46.0 | | 122.0 |
| DIN400-14 | 27.5 | 15.0 | 38.5 | 55.0 | 70.0 | 140.0 |
| DIN400-16 | | 17.0 | | 55.0 | | 140.0 |
| DIN400-20 | | 8.4 | | 55.0 | | 140.0 |
| DIN500-16 | 31.0 | 10.5 | 42.0 | 60.0 | 70.0 | 150.0 |
| DIN500-20 | | 13.0 | | 60.0 | | 150.0 |
| DIN625-16 | 34.5 | 15.0 | 44.0 | 64.0 | 80.0 | 160.0 |
| DIN625-20 | | 17.0 | | 64.0 | | 160.0 |
| DIN800-16 | 40.0 | 8.4 | 52.0 | 75.0 | 100.0 | 195.0 |
| DIN800-20 | | 10.5 | | 75.0 | | 195.0 |
| DIN1000-16 | 44.0 | 13.0 | 58.0 | 85.0 | 100.0 | 195.0 |
| DIN1000-20 | | 15.0 | | 85.0 | | 195.0 |

## CL-2H Copper Tube Terminals

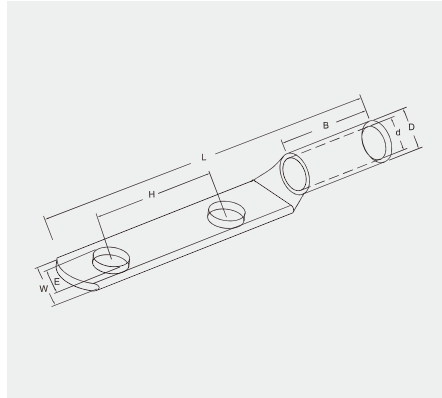


CE SGS RoHS

| ITEM NO. | φd(mm) | φE(mm) | φD(mm) | W(mm) | B(mm) | L1(mm) | H(mm) |
|---|---|---|---|---|---|---|---|
| CL14-2H-6 | 5.8 | 6.4 | 8.8 | 13.0 | 28.5 | 117.5 | 45.0 |
| CL22-2H-8 | 7.7 | 8.4 | 11.3 | 16.0 | 28.5 | 119.2 | 45.0 |
| CL38-2H-10 | 9.8 | 10.5 | 12.4 | 18.3 | 31.7 | 120.0 | 45.0 |
| CL38-2H-12 | | 13.0 | | 18.3 | | | 45.0 |
| CL60-2H-10 | 11.0 | 10.5 | 14.0 | 20.5 | 40.0 | 130.0 | 45.0 |
| CL60-2H-12 | | 13.0 | | 20.5 | | | 45.0 |
| CL70-2H-10 | 12.0 | 10.5 | 15.0 | 21.4 | 40.0 | 130.0 | 45.0 |
| CL70-2H-12 | | 13.0 | | 21.4 | | | 45.0 |
| CL80-2H-12 | 13.0 | 13.0 | 16.0 | 23.2 | 40.0 | 130.0 | 45.0 |
| CL100-2H-12 | 14.0 | 13.0 | 18.0 | 26.0 | 42.0 | 132.0 | 45.0 |
| CL125-2H-12 | 16.0 | 13.0 | 20.0 | 29.0 | 42.0 | 135.0 | 45.0 |
| CL150-2H-12 | 17.0 | 13.0 | 22.0 | 31.5 | 50.0 | 150.0 | 45.0 |
| CL180-2H-12 | 18.2 | 13.0 | 23.0 | 33.0 | 50.0 | 150.0 | 45.0 |
| CL200-2H-12 | 20.0 | 13.0 | 26.0 | 37.0 | 52.5 | 150.0 | 45.0 |
| CL250-2H-12 | 22.0 | 13.0 | 28.0 | 40.0 | 50.0 | 150.0 | 45.0 |
| CL325-2H-12 | 25.0 | 13.0 | 32.0 | 46.0 | 68.0 | 180.0 | 45.0 |
| CL400-2H-12 | 30.0 | 13.0 | 37.0 | 54.0 | 60.0 | 180.0 | 45.0 |
| CL500-2H-12 | 31.0 | 13.0 | 40.0 | 57.5 | 60.0 | 180.0 | 45.0 |
| B-CL14-2H-6 | 5.8 | 6.4 | 8.3 | 13.0 | 28.5 | 117.5 | 45.0 |
| B-CL22-2H-8 | 7.7 | 8.4 | 10.7 | 16.0 | 28.5 | 119.2 | 45.0 |
| B-CL38-2H-10 | 9.8 | 10.5 | 11.9 | 17.5 | 31.7 | 120.0 | 45.0 |
| B-CL38-2H-12 | | 13.0 | | 17.5 | | | 45.0 |
| B-CL60-2H-10 | 11.0 | 10.5 | 13.5 | 19.5 | 40.0 | 130.0 | 45.0 |
| B-CL60-2H-12 | | 13.0 | | 19.5 | | | 45.0 |
| B-CL70-2H-10 | 12.0 | 10.5 | 14.5 | 21.4 | 40.0 | 130.0 | 45.0 |
| B-CL70-2H-12 | | 13.0 | | 21.4 | | | 45.0 |
| B-CL80-2H-12 | 13.0 | 13.0 | 15.5 | 23.2 | 40.0 | 130.0 | 45.0 |
| B-CL100-2H-12 | 14.0 | 13.0 | 17.3 | 26.0 | 42.0 | 132.0 | 45.0 |
| B-CL125-2H-12 | 16.0 | 13.0 | 19.3 | 28.0 | 42.0 | 135.0 | 45.0 |
| B-CL150-2H-12 | 17.0 | 13.0 | 21.1 | 31.0 | 50.0 | 150.0 | 45.0 |
| B-CL180-2H-12 | 18.2 | 13.0 | 22.1 | 33.0 | 50.0 | 150.0 | 45.0 |
| B-CL200-2H-12 | 20.0 | 13.0 | 24.9 | 36.0 | 50.0 | 150.0 | 45.0 |
| B-CL250-2H-12 | 22.0 | 13.0 | 26.9 | 39.0 | 50.0 | 150.0 | 45.0 |
| B-CL325-2H-12 | 25.0 | 13.0 | 30.7 | 45.0 | 68.0 | 180.0 | 45.0 |
| B-CL400-2H-12 | 30.0 | 13.0 | 35.7 | 54.0 | 60.0 | 180.0 | 45.0 |
| B-CL500-2H-12 | 31.0 | 13.0 | 38.4 | 56.0 | 60.0 | 180.0 | 45.0 |

## GPH90° Copper Tube Terminals

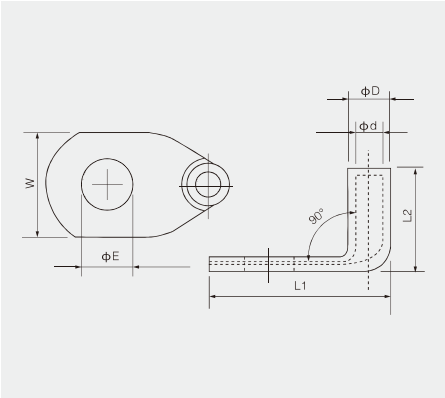


CE RoHS

| ITEM NO. | φd(mm) | φE(mm) | φD(mm) | W(mm) | L2(mm) | L1(mm) |
|---|---|---|---|---|---|---|
| GPH90-6/5 | 3.5 | 5.3 | 6.5 | 10.0 | 14.0 | 22.5 |
| GPH90-6/6 | | 6.4 | | 12.0 | | 24.0 |
| GPH90-6/8 | | 8.4 | | 15.0 | | 27.5 |
| GPH90-6/10 | | 10.5 | | 16.0 | | 29.5 |
| GPH90-10/5 | 4.5 | 5.3 | 7.0 | 12.0 | 16.0 | 23.0 |
| GPH90-10/6 | | 6.4 | | 12.0 | | 24.0 |
| GPH90-10/8 | | 8.4 | | 15.0 | | 28.0 |
| GPH90-10/10 | | 10.5 | | 18.0 | | 29.5 |
| GPH90-16/5 | 5.5 | 5.3 | 8.5 | 12.0 | 20.0 | 22.5 |
| GPH90-16/6 | | 6.4 | | 14.0 | | 24.0 |
| GPH90-16/8 | | 8.4 | | 15.0 | | 28.0 |
| GPH90-16/10 | | 10.5 | | 18.0 | | 31.0 |
| GPH90-16/12 | | 13.0 | | 19.0 | | 32.0 |
| GPH90-25/6 | 6.9 | 6.4 | 10.0 | 15.0 | 21.0 | 27.5 |
| GPH90-25/8 | | 8.4 | | 16.0 | | 32.5 |
| GPH90-25/10 | | 10.5 | | 18.0 | | 32.5 |
| GPH90-25/12 | | 13.0 | | 19.0 | | 34.0 |
| GPH90-35/6 | 8.5 | 6.4 | 12.0 | 17.0 | 24.0 | 28.5 |
| GPH90-35/8 | | 8.4 | | 17.0 | | 34.0 |
| GPH90-35/10 | | 10.5 | | 20.0 | | 34.0 |
| GPH90-35/12 | | 13.0 | | 22.0 | | 40.5 |
| GPH90-50/6 | 10.0 | 6.4 | 14.0 | 20.0 | 28.5 | 37.0 |
| GPH90-50/8 | | 8.4 | | 20.0 | | 40.5 |
| GPH90-50/10 | | 10.5 | | 20.0 | | 40.5 |
| GPH90-50/12 | | 13.0 | | 23.0 | | 42.5 |
| GPH90-50/16 | | 17.0 | | 28.0 | | 50.5 |
| GPH90-70/8 | 12.0 | 8.4 | 16.5 | 24.0 | 31.0 | 43.0 |
| GPH90-70/10 | | 10.5 | | 24.0 | | 43.0 |
| GPH90-70/12 | | 13.0 | | 24.0 | | 44.5 |
| GPH90-70/16 | | 17.0 | | 28.0 | | 53.0 |
| GPH90-70/20 | | 21.0 | | 30.0 | | 59.0 |

## GPH90° Copper Tube Terminals

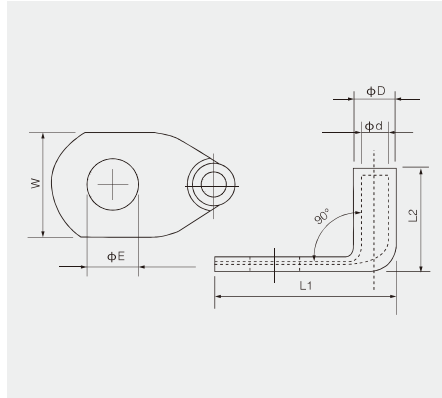


CE SGS RoHS

| ITEM NO. | φd(mm) | φE(mm) | φD(mm) | W(mm) | L2(mm) | L1(mm) |
|---|---|---|---|---|---|---|
| GPH90-95/8 | 13.5 | 8.4 | 18.0 | 26.0 | 35.0 | 44.5 |
| GPH90-95/10 | | 10.5 | | 26.0 | | 44.5 |
| GPH90-95/12 | | 13.0 | | 26.0 | | 46.5 |
| GPH90-95/16 | | 17.0 | | 28.0 | | 52.0 |
| GPH90-95/20 | | 21.0 | | 30.5 | | 59.0 |
| GPH90-120/10 | 15.0 | 10.5 | 19.5 | 29.0 | 35.5 | 49.0 |
| GPH90-120/12 | | 13.0 | | 29.0 | | 49.0 |
| GPH90-120/16 | | 17.0 | | 29.0 | | 55.0 |
| GPH90-120/20 | | 21.0 | | 30.5 | | 61.0 |
| GPH90-150/10 | 16.5 | 10.5 | 21.0 | 31.0 | 40.0 | 48.0 |
| GPH90-150/12 | | 13.0 | | 31.0 | | 51.0 |
| GPH90-150/16 | | 17.0 | | 31.0 | | 56.0 |
| GPH90-150/20 | | 21.0 | | 34.0 | | 61.5 |
| GPH90-185/12 | 19.0 | 13.0 | 24.0 | 35.0 | 46.0 | 58.5 |
| GPH90-185/16 | | 17.0 | | 35.0 | | 58.5 |
| GPH90-185/20 | | 21.0 | | 35.0 | | 65.0 |
| GPH90-240/12 | 21.0 | 13.0 | 26.0 | 40.0 | 50.0 | 54.0 |
| GPH90-240/16 | | 17.0 | | 40.0 | | 60.0 |
| GPH90-240/20 | | 21.0 | | 40.0 | | 67.8 |
| GPH90-300/12 | 23.5 | 13.0 | 29.5 | 43.0 | 59.0 | 74.5 |
| GPH90-300/16 | | 17.0 | | 43.0 | | 64.0 |
| GPH90-300/20 | | 21.0 | | 43.0 | | 70.5 |
| GPH90-400/12 | 27.0 | 13.0 | 34.0 | 49.0 | 62.0 | 79.0 |
| GPH90-400/16 | | 17.0 | | 49.0 | | 68.5 |
| GPH90-400/20 | | 21.0 | | 49.0 | | 75.0 |

## DTL-2 Copper-aluminium Connecting Terminal

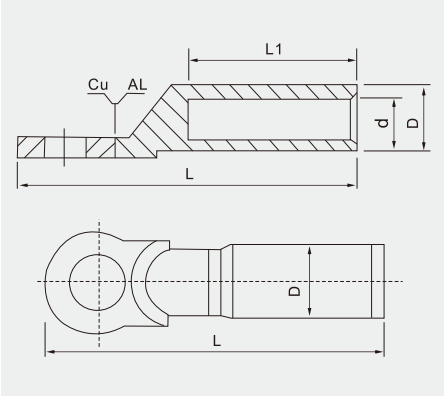


CE RoHS

| TYPE | Ø | D | d | L | L1 |
|---|---|---|---|---|---|
| DTL-2-16 | 13 | 16 | 5.5 | 87 | 42 |
| DTL-2-25 | 13 | 16 | 6.5 | 87 | 42 |
| DTL-2-35 | 13 | 16 | 8 | 87 | 42 |
| DTL-2-50 | 13 | 20 | 9 | 87 | 43 |
| DTL-2-70 | 13 | 20 | 11 | 87 | 43 |
| DTL-2-95 | 13 | 20 | 12.5 | 87 | 43 |
| DTL-2-120 | 13 | 25 | 13.5 | 111 | 60 |
| DTL-2-150 | 13 | 25 | 15.5 | 111 | 60 |
| DTL-2-185 | 13 | 32 | 17.5 | 116 | 60 |
| DTL-2-240 | 13 | 32 | 19.5 | 116 | 60 |
| DTL-2-300 | 13 | 34 | 22.5 | 120 | 62 |
| DTL-2-400 | 19 | 40 | 26 | 159 | 70 |
| DTL-2-500 | 19 | 47 | 29 | 167 | 75 |
| DTL-2-630 | 21 | 54 | 34 | 20 | 80 |

## Copper-aluminum Connecting Terminals

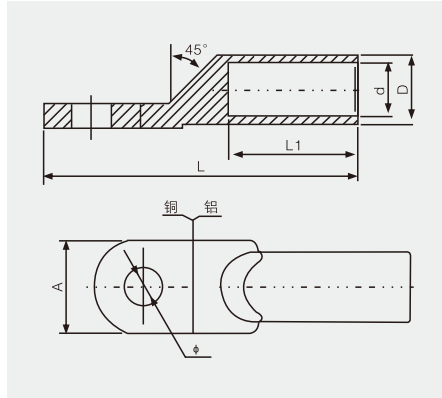


CE RoHS

| TYPE | Main dimensions (mm) | | | | | |
|---|---|---|---|---|---|---|
| | ϕ | D | d | L | LI | A |
| DTL-10 | 8. 5 | 10 | 5. 5 | 68 | 30 | 16 |
| DTL-16 | 8. 5 | 11 | 6. 5 | 70 | 32 | 16 |
| DTL-25 | 8. 5 | 12 | 74 | 75 | 36 | 18 |
| DTL-35 | 8. 5 | 14 | 8. 4 | 85 | 40 | 20. 5 |
| DTL-50 | 10. 5 | 16 | 10 | 90 | 40 | 23 |
| DTL-70 | 13. 0 | 18 | 11. 8 | 102 | 47 | 26 |
| DTL-95 | 13. 0 | 21 | 13. 5 | 112 | 51 | 28 |
| DTL-120 | 15. 0 | 23 | 15. 0 | 120 | 56 | 30 |
| DTL-150 | 15. 0 | 25 | 17 | 126 | 57 | 34 |
| DTL-185 | 17 | 27 | 19. 0 | 133 | 60 | 37 |
| DTL-240 | 17 | 30 | 21. 0 | 140 | 62 | 40 |
| DTL-300 | 21 | 34 | 23. 5 | 158 | 66 | 50 |
| DTL-400 | 21 | 38 | 27 | 170 | 76 | 50 |
| DTL-500 | 21 | 42 | 29. 2 | 180 | 80 | 690 |
| DTL-630 | – | 52 | 34. 5 | 225 | 85 | 80 |
| DTL-800 | – | 60 | 38 | 270 | 95 | 100 |